SHARP®

SERVICE MANUAL

SE0032LF94C00
Issued: 22nd July 2004

AK-53 CHASSIS

PAL B/G, I / SECAM L/L', B/G, D/K SYSTEM COLOUR TELEVISION

MODEL 32LF-94EC

In the interests of user safety (required by safety regulations in some countries) the set should be restored to its original condition and only parts identical to those specified should be used.

In order to service the model 32LF-94EC, refer to the AK-53 Chassis Service Manual (SE00AK53CHA00).

CONTENTS

ELECTRICAL SPECIFICATIONS 3
IMPORTANT SERVICING NOTES 4
CONTROLS & TERMINALS 5
PRINTED WIRING BOARD LAYOUT 7
PARTS LISTING 9
HOW TO UPDATE THE TECHNICAL INFORMATION 19

SHARP CORPORATION

This document has been published to be used for after sales service only.

SERVICE MANUAL UPDATE LOG SHEET

Technical Report No. Technical Bulletin No.	Cause / Solution	Part No.	Page No.	Application Data /Serial No.

Use this page to keep any special servicing information as Technical Report (Bulletin), Technical Information, etc.
If only part number changes are required, just change part number directly the part number in the Parts Listing Section.
If you need more information, please refer to the Technical Report (Bulletin).

ELECTRICAL SPECIFICATIONS

•Power Input ..... 220V-240 Volts AC 50 Hz

•Power Consumption
Normal Operation (Method IEC60107) ..... 113 W
Stand-by Operation ..... < 3 W

•Audio Power Output Rating (MPO) / Impedance
Internal Left Speaker ..... 10 W, 7 Ω
Internal Right Speaker ..... 10 W, 7 Ω

•Speakers
Full range (2 pcs) ..... 60 x 120 mm

•Convergence (Maximum Misconvergence)

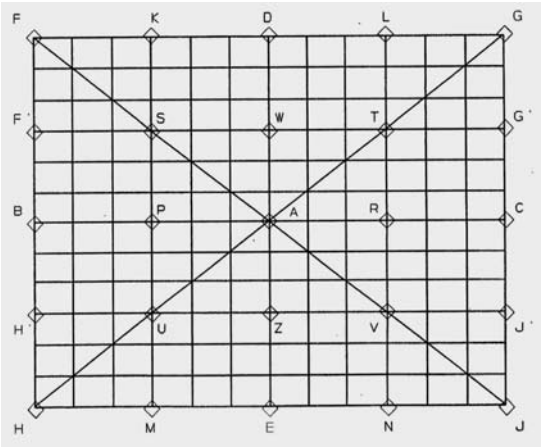

AREA	mm
A	0.4
BC	1.4
DE	1.0
FGHJ	1.8
KLMN	1.6
F'G'H'J'	1.6
STUV	1.4

•Picture Intermediate frequency
L' 33.9MHz
L, B/G, D/K,I 38.9MHz

•Sound Carrier Trap
L' 40.4MHz
L, D/K 32.4MHz
B/G 33.4MHz
I 32.9MHz

•Adjacent Sound Carrier Trap
L' 32.4MHz
L, D/K, B/G 40.4MHz
I 40.9MHz

•Adjacent Picture Carrier Trap
L' 41.9MHz
L, D/K, I 30.9MHz
B/G 31.9MHz

•Aerial Input Impedance
VHF/UHF ..... 75 ohm Unbalanced

•Tuning Ranges ..... 45.75MHz thru 855.25 MHz
VHF: IR A - J / S1 - S41 CH (Hiperband)
E2 - E12 / F2 - F10
UHF: I21 - I69 CH / E21 - E69

•White Level
Apply the rated voltage at the rated frequency to the TV set, while it is receiving full white pattern RF signal of 60 dB/μV from its RF input via the pattern generator.
Turn all picture controls to maximum value. Measure the colour temperatures at the center of the screen by using the colour analyzer.

X=0.304 ± 0.015 Y=0.306 ± 0.015

Specifications are subject to change without prior notice.

MODEL DESTINATION (Operation Manual Languages)

32LF-94EC: Czech, English, Hungarian, Polish, Romanian, Russian, Slovakian

WARNING

The chassis in this receiver is partially hot. Use an isolation transformer between the line cord plug and power receptacle, when servicing this chassis.
To prevent electric shock, do not remove cover. No user-serviceable parts inside. Refer servicing to qualified service personnel.

IMPORTANT SERVICING NOTES

Only qualified service personnel are allowed to carry out maintenance and repair of this receiver.

Servicing of High Voltage System and CRT

It is important that the static charge is removed from the high voltage system when carrying out work on the receiver. This can be achieved by connecting a 10K resistor (with a suitably insulated lead) from the CRT cavity connector to the CRT ground tag. This must be carried out with the AC supply disconnected from the receiver.

Note the following:

- The CRT in this receiver employs Integral Implosion Protection.
- If the CRT has to be changed it MUST be replaced with the correct type for continued safe working.
- DO NOT lift the CRT by its neck.
- When handing the CRT, ensure that shatterproof goggles are worn.
- Ensure that the CRT is discharge before handling.

X-Ray

This receiver is designed to keep any x-ray emission to an absolute minimum. Some fault conditions and servicing procedures may produce potentially hazardous x-ray radiation levels. This is a problem when in close proximity to the receiver for long periods of time. To reduce any risks associated with this, please observe the following precautions:

1. When undertaking any servicing on this chassis, DO NOT increase the EHT to more than 33 KV, (at a instantaneous beam current of 2000 μA).

2. Ensure that during normal operation the EHT does not exceed 29.5 KV (at a beam current of 1900 μA). This level has been preset in the factory. Always check that this level has not been exceeded after carrying out any repair on the receiver.
3. DO NOT replace the CRT with any other type than that specified in the parts listing as this may cause excessive x-ray radiation.

Before returning the receiver to the customer

In addition to the above checks, the following should also be carried out before returning the receiver to the customer.

1. Inspect all the leads to ensure that they are dressed correctly and that they are not obstructed or pinched by any other parts.

2. Ensure that all protective devices are in good condition. These will include nonmetallic control knobs, insulating fish papers, cabinets backs, compartment covers or shields, mechanical insulators, etc.

CONTROLS & TERMINALS

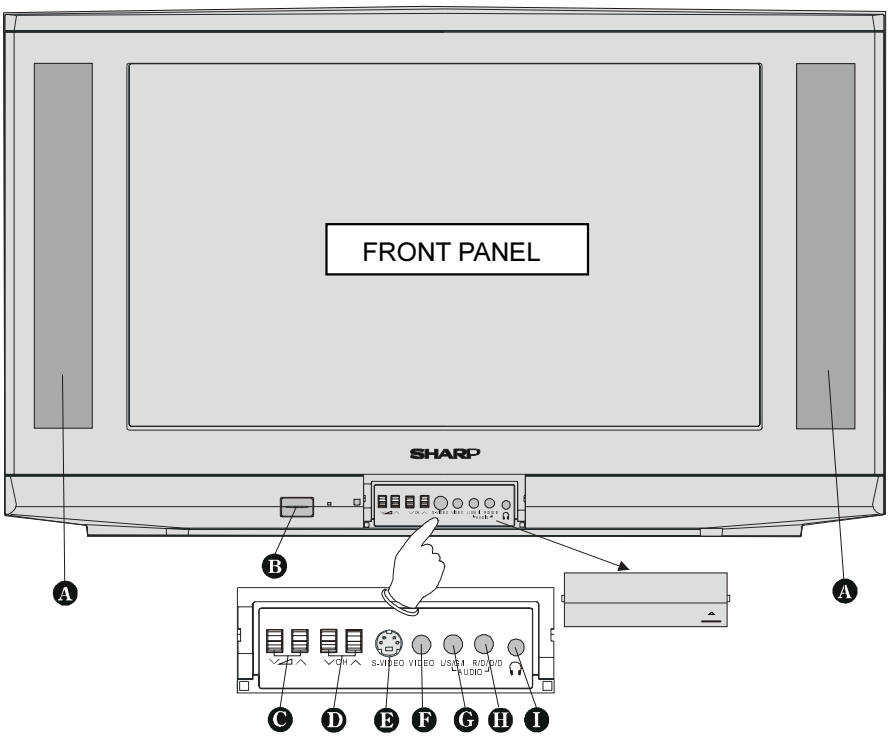

Ⓐ Speakers (left + right)
Ⓑ ⏻ = Power On / Off
Ⓒ ∨ ◿ ∧= Volume -/+
Ⓓ ∨ **CH** ∧ = Program -/+
Ⓔ **S-VIDEO**
Ⓕ **VIDEO**
Ⓖ **AUDIO L (L/S/G/I)** = Audio left
Ⓗ **AUDIO R (R/D/D/D)** = Audio right
Ⓘ 🎧 = Headphone 3,6 mm Ø

REAR TV
RF Input
1. Aerial terminal

21-pin In/Out

2. 21-pin Audio/Video (RGB) (EXT.1) With PAL/SECAM/NTSC/S-Video Input
3. 21-pin Audio/Video (EXT.2) With PAL/SECAM/NTSC Video Input

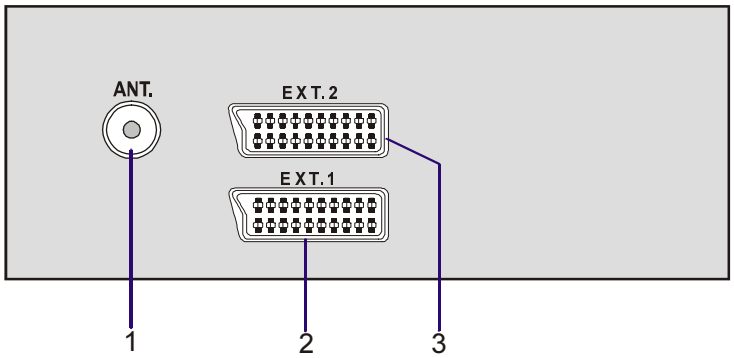

REMOTE CONTROL

1. ⏻ = Stand By
2. △ = Cursor Up
3. ▷ = Cursor Right
4. **OK** = Store / Still Picture
5. (i) = Info (Program Table)
6. **0 - 9** = Direct Program
7. **- / - -** = Double Digit
8. = Screen Format button
9. **P/CH+** = Program Up
10. **+** = Volume Up
11. (TV) = TV / Quit Menu
12. (EXT) = EXT button (**EXT-1, EXT-2, S-VHS, S-VHS EXT2** or **FRONT-AV**)
13. **Yellow** = Feature Menu
14. **Blue** = Installation Menu
15. = Hold
16. = Update
17. = Index Page
18. = Reveal
19. = Expand
20. = Mix
21. = Teletext
22. = Time
23. **Red** = Sound Menu
24. **Green** = Picture Menu
25. = Mute
26. **I-II** = Mono/Stereo - Dual I-II
27. **-** = Volume Down
28. **- P/CH** = Program Down
29. = Flash back button
30. **M** = Menu
31. ▽ = Cursor Down
32. ◁ = Cursor Left

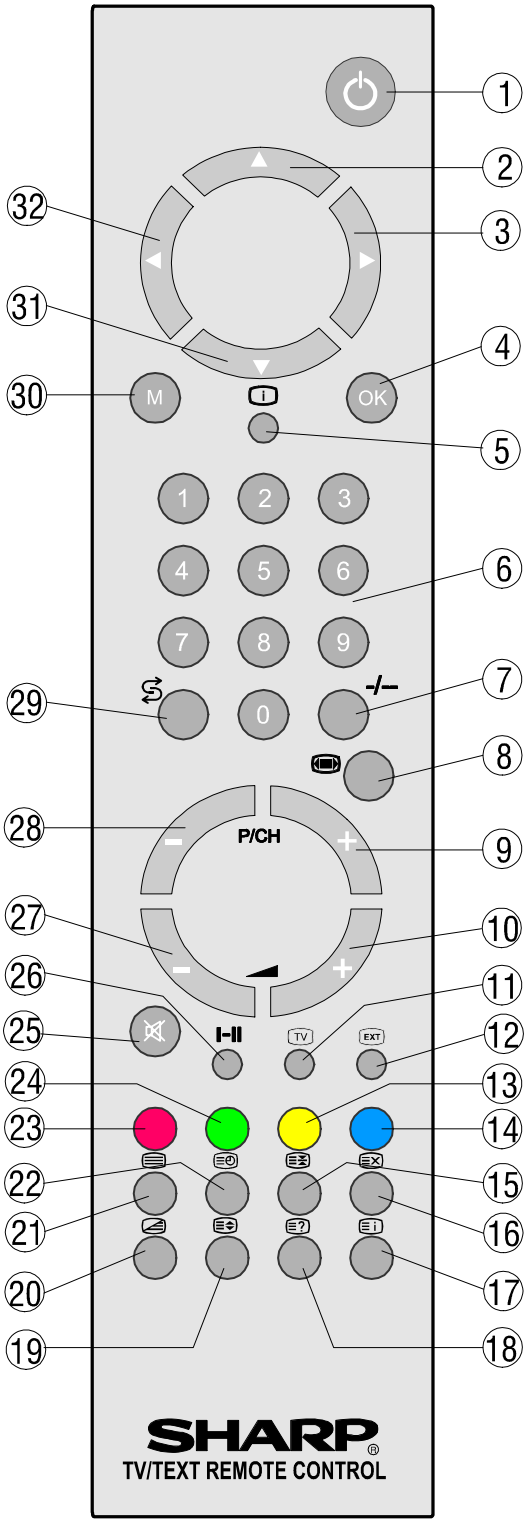

CHASSIS LAYOUT

Mother Unit

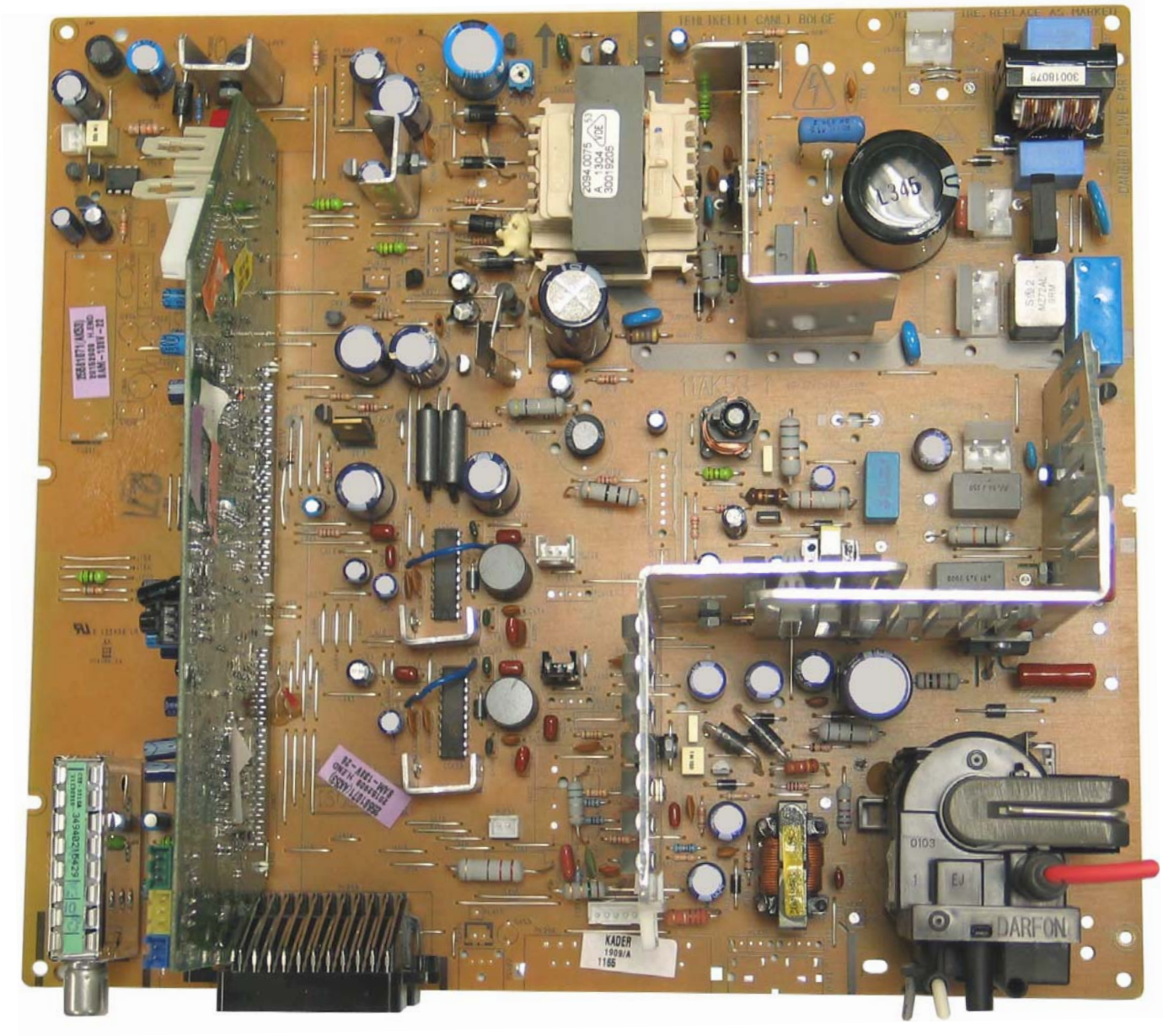

Front Unit (SW+Keyboard+FAV)

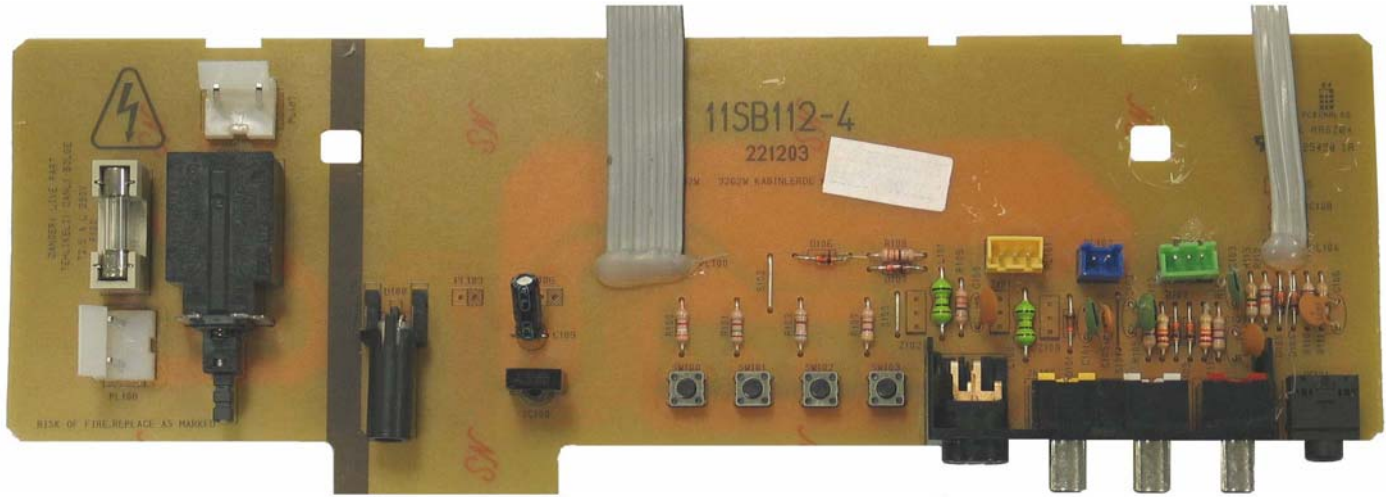

Digital Module Unit

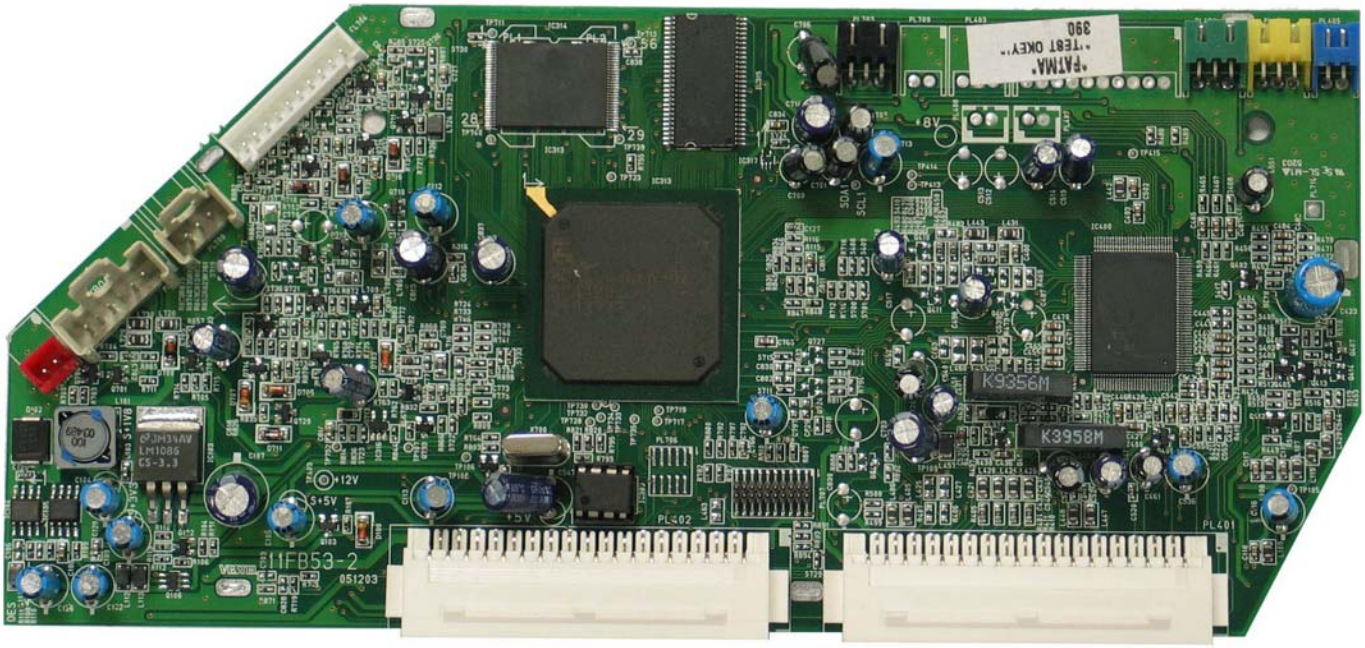

CRT Socket Unit

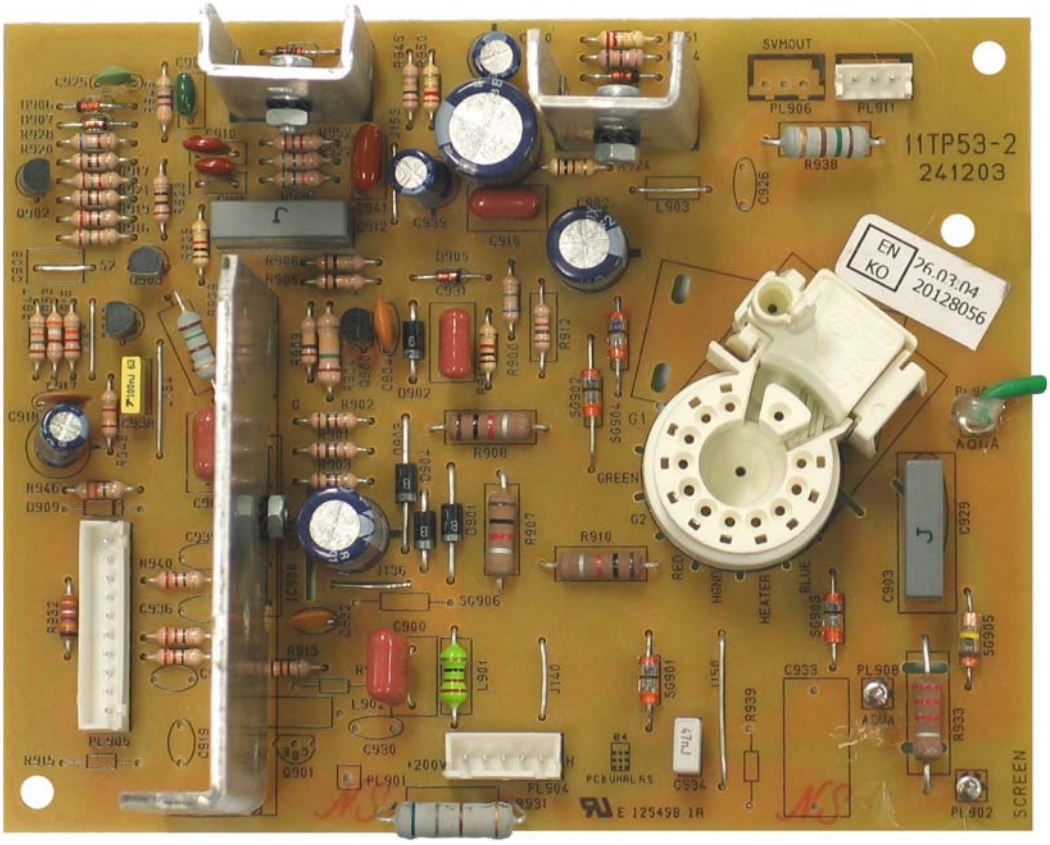

PARTS LISTING

REPLACEMENT PARTS

Replacement parts which have special safety characteristics are identified in this manual. Electrical components having such features are identified by △ in the Replacement Parts Listing.
The use of a substitute replacement part which does not have the same safety characteristics as the factory recommended is not permitted.
Replacement parts not shown in this service manual may create shock fire, or other hazards.

HOW TO ORDER REPLACEMENT PARTS

To have your order completed promptly and correctly please supply the following information.

1. MODEL NUMBER 2. REF. NO.
3. PART NO. (*) 4. DESCRIPTION
5. CODE 6. QUANTITY

(*) When ordering any part, a "V" should be added before the Part No.

	REF No.	(*) PARTS	DESCRIPTION	SN CODE	EX CODE
			PICTURE TUBE		
△	.	30009837	32" CPT TUBE SAFE 10 16:9 REALFLAT	**	DZ
△	.	30032255	32"16:9DEG&EARTH CB.SAFE WO/UL R/F(SHARP	AP	BA
	.	30026312	ROTATION COIL AK41 29"RF THO	AE	AP
			TUNER		
	TU200	30009637	TUNER WSP (PLL) CTF5510A	AR	BC
			INTEGRATED CIRCUITS		
	IC100	30001669	PREAMPLIFIER TFMS1380	AD	AM
	IC100	30013687	IC TDA8177F	AH	AT
	IC103	30022479	IC LDO LM1086 3.3V/1.5A D2PAK VINMAX=18V	AC	AK
	IC104	30022477	IC STEP DOWN CS51033 1A SO8	AE	AP
	IC105	30001665	IC LM358N	AA	AE
	IC105	30022958	TR PMOS STS5PF30L -5A/-30V SO8	AB	AF
	IC309	20170691	IC M24C64 D1074511152111221111	AD	AL
	IC313	30021602	IC PNX3006E / N302	BC	BS
	IC314	30027713	IC FLASH 32Mbit 3V x8/x16 (TSOP-56)	AQ	BB
	IC315	30029152	C SDRAM 64MBIT(1Mx16bitx4bank)TSOP(CTV)	AR	BC
	IC316	30022895	IC RESET NE56610-29	AD	AL
	IC400	30021285	IC PNX3000HL / N2	AS	BD
	IC401	30018422	IC AAMP TDA7480L 10W PDIP20	AA	AB
	IC402	30018422	IC AAMP TDA7480L 10W PDIP20	AA	AB
△	IC801	30015087	IC SAFE OPTOCOUPLER TCET1102G	AA	AE
	IC803	30001500	IC LM7808	AC	AH
	IC804	30011968	IC SMPS MC44608 DIP8	AF	AQ
	IC900	30008721	IC TDA6108	AH	AT
			TRANSISTORS		
	Q100	30018627	TR NMOS IRFU110 4.3A/100V TO251	AA	AB
	Q101	30016686	TR 2SC5302	AK	AV
	Q102	30001458	TR BC858B SMD	AA	AB
	Q102	30001457	TR BC848B SMD	AA	AC
	Q103	30001458	TR BC858B SMD	AA	AB
	Q103	30001457	TR BC848B SMD	AA	AC
	Q104	30007799	TR BDX53BFI	AC	AK
	Q105	30001454	TR BC548B	AA	AC
	Q106	30001458	TR BC858B SMD	AA	AB
	Q106	30025524	TR PMEM4010PD PNP/SCH -1A -40V SOT457	AB	AF
	Q107	30001452	TR BC327	AA	AC
	Q108	30001457	TR BC848B SMD	AA	AC
	Q109	30001452	TR BC327	AA	AC
	Q110	30001453	TR BC337	AA	AC
	Q111	30001453	TR BC337	AA	AC
	Q112	30001457	TR BC848B SMD	AA	AC
	Q113	30001457	TR BC848B SMD	AA	AC
	Q114	30001457	TR BC848B SMD	AA	AC
	Q115	30001458	TR BC858B SMD	AA	AB
	Q116	30023137	IC TL431 %1 TOL (TO-92)	AA	AD

	REF No.	PARTS	DESCRIPTION	SN CODE	EX CODE
	Q117	30001458	TR BC858B SMD	AA	AB
	Q400	30001458	TR BC858B SMD	AA	AB
	Q401	30001457	TR BC848B SMD	AA	AC
	Q402	30001457	TR BC848B SMD	AA	AC
	Q403	30001457	TR BC848B SMD	AA	AC
	Q404	30001457	TR BC848B SMD	AA	AC
	Q405	30001458	TR BC858B SMD	AA	AB
	Q406	30001458	TR BC858B SMD	AA	AB
	Q412	30001457	TR BC848B SMD	AA	AC
	Q413	30001457	TR BC848B SMD	AA	AC
	Q700	30001458	TR BC858B SMD	AA	AB
	Q701	30001457	TR BC848B SMD	AA	AC
	Q702	30001457	TR BC848B SMD	AA	AC
	Q703	30001457	TR BC848B SMD	AA	AC
	Q704	30001457	TR BC848B SMD	AA	AC
	Q706	30001457	TR BC848B SMD	AA	AC
	Q707	30001458	TR BC858B SMD	AA	AB
	Q708	30001457	TR BC848B SMD	AA	AC
	Q709	30001458	TR BC858B SMD	AA	AB
	Q710	30001458	TR BC858B SMD	AA	AB
	Q711	30001457	TR BC848B SMD	AA	AC
	Q712	30001458	TR BC858B SMD	AA	AB
	Q713	30001458	TR BC858B SMD	AA	AB
	Q714	30001457	TR BC848B SMD	AA	AC
	Q715	30001458	TR BC858B SMD	AA	AB
	Q716	30001458	TR BC858B SMD	AA	AB
	Q717	30001457	TR BC848B SMD	AA	AC
	Q718	30001458	TR BC858B SMD	AA	AB
	Q719	30001457	TR BC848B SMD	AA	AC
	Q720	30001457	TR BC848B SMD	AA	AC
	Q722	30001458	TR BC858B SMD	AA	AB
	Q725	30001457	TR BC848B SMD	AA	AC
	Q729	30001458	TR BC858B SMD	AA	AB
	Q733	30001457	TR BC848B SMD	AA	AC
	Q734	30001458	TR BC858B SMD	AA	AB
	Q735	30001457	TR BC848B SMD	AA	AC
	Q801	30001454	TR BC548B	AA	AC
	Q802	30001386	TR MTP6N60E (PLASTIC)	AE	AP
	Q803	30001454	TR BC548B	AA	AC
	Q804	30001457	TR BC848B SMD	AA	AC
	Q805	30001454	TR BC548B	AA	AC
	Q806	30001428	TR BF423	AA	AC
	Q807	30001457	TR BC848B SMD	AA	AC
	Q808	30001457	TR BC848B SMD	AA	AC
	Q810	30001454	TR BC548B	AA	AC
	Q811	30001457	TR BC848B SMD	AA	AC
	Q812	30001458	TR BC858B SMD	AA	AB
	Q813	30007802	TR STP20N06LFP	AD	AL
	Q814	30001455	TR BC558B	AA	AC
	Q815	30023137	IC TL431 %1 TOL (TO-92)	AA	AD
	Q816	30023137	IC TL431 %1 TOL (TO-92)	AA	AD
	Q817	30001384	TR MCR22-6	AB	AG
	Q818	30010149	TR BD243C	AC	AG
	Q900	30001427	TR BF422	AA	AE
	Q902	30017863	TR BF199	AA	AD
	Q903	30017862	TR BF370	AA	AE
	Q904	30003768	TR BD139	AB	AF
	Q905	30013531	TR BD140	AB	AF
	Q906	30017863	TR BF199	AA	AD
			DIODES		
	D100	30001279	LED RED/GREEN LTL293SJ	AC	AH
	D100	30001291	DIODE HER107 1A/800V 30A	AA	AB
	D100	30003720	DIODE ZENER BZT55C5V6 5.6V SMD	AA	AB
	D101	30001371	DIODE ZENER 5.1V ZPD	AA	AB
	D102	30001371	DIODE ZENER 5.1V ZPD	AA	AB

REF No.	PARTS	DESCRIPTION	SN CODE	EX CODE
D102	30007760	DIODE ZENER SMD BZT55C10	AA	AB
D102	30018574	DIODE SCH SS33 3A/30V DO214AB	AA	AE
D103	30001371	DIODE ZENER 5.1V ZPD	AA	AB
D103	30007763	DIODE ZENER SMD BZT55C5V1	AA	AB
D104	30001371	DIODE ZENER 5.1V ZPD	AA	AB
D104	30007678	DIODE GUC DTV32F1500A 6A/1500V 100A	AD	AL
D105	30001371	DIODE ZENER 5.1V ZPD	AA	AB
D105	30007768	DIODE STTA506F 5A/600V 55A	AD	AM
D106	30001371	DIODE ZENER 5.1V ZPD	AA	AB
D106	30001291	DIODE HER107 1A/800V 30A	AA	AB
D107	30001371	DIODE ZENER 5.1V ZPD	AA	AB
D107	30001291	DIODE HER107 1A/800V 30A	AA	AB
D108	30001299	DIODE UF5404 3A/400V 150A	AA	AD
D109	30001299	DIODE UF5404 3A/400V 150A	AA	AD
D110	30001291	DIODE HER107 1A/800V 30A	AA	AB
D111	30001288	DIODE BYV27-200 2A/200V 50A	AA	AD
D112	30012412	DIODE ZENER 2.4V SMD	AA	AB
D113	30001377	DIODE ZENER 33V UZT 33B	AB	AF
D114	30001285	DIODE 1N4148 SMD	AA	AB
D117	30001285	DIODE 1N4148 SMD	AA	AB
D118	30001285	DIODE 1N4148 SMD	AA	AB
D119	30001285	DIODE 1N4148 SMD	AA	AB
D120	30001318	DIODE BA159 1A/800V 20A	AA	AB
D121	30009699	DIODE ZENER SMD BZT55C12	AA	AB
D122	30009699	DIODE ZENER SMD BZT55C12	AA	AB
D123	30001318	DIODE BA159 1A/800V 20A	AA	AB
D124	30009699	DIODE ZENER SMD BZT55C12	AA	AB
D125	30001291	DIODE HER107 1A/800V 30A	AA	AB
D127	30001285	DIODE 1N4148 SMD	AA	AB
D128	30001285	DIODE 1N4148 SMD	AA	AB
D201	30007763	DIODE ZENER SMD BZT55C5V1	AA	AB
D202	30007763	DIODE ZENER SMD BZT55C5V1	AA	AB
D203	30007763	DIODE ZENER SMD BZT55C5V1	AA	AB
D204	30018735	DIODE ZENER BZT55C15 15V SMD	AA	AB
D205	30018735	DIODE ZENER BZT55C15 15V SMD	AA	AB
D207	30007763	DIODE ZENER SMD BZT55C5V1	AA	AB
D400	30012411	DIODE BA782 SMD	AA	AD
D404	30001284	DIODE 1N4148 0.15A/100V 0.5A	AA	AB
D700	30001285	DIODE 1N4148 SMD	AA	AB
D701	30001285	DIODE 1N4148 SMD	AA	AB
D703	30021518	DIODE ZENER BZT55C2V7 2.7V SMD	AA	AA
D705	30021443	DIODE ZENER BZT55C22 22V SMD	AA	AA
D707	30021445	DIODE ZENER BZT55C47 47V SMD	AA	AA
D711	30001285	DIODE 1N4148 SMD	AA	AB
D713	30022478	DIODE SCH BAT254 0.2A/30V SOD110	AA	AC
D714	30007169	DIODE BAV99 (SOT23) 0.25A/70V 4.5A	AA	AA
D715	30007169	DIODE BAV99 (SOT23) 0.25A/70V 4.5A	AA	AA
D716	30001285	DIODE 1N4148 SMD	AA	AB
D717	30001285	DIODE 1N4148 SMD	AA	AB
D718	30001285	DIODE 1N4148 SMD	AA	AB
D801	30001318	DIODE BA159 1A/800V 20A	AA	AB
D802	30001323	DIODE BY299 2A/800V 70A	AA	AD
D803	30009366	DIODE UF5402 3A/200V 150A	AB	AF
D804	30009366	DIODE UF5402 3A/200V 150A	AB	AF
D805	30007681	DIODE UF5407 3A/800V 150A	AB	AF
D805+	30001964	FERRITE BAR 5*8	AA	AD
D806	30001344	DIODE ZENER 6.2V 1/2W	AA	AB
D807	30000613	RES SMD 1/8W 2.4K G	AA	AA
D808	30001288	DIODE BYV27-200 2A/200V 50A	AA	AD
D809	30001285	DIODE 1N4148 SMD	AA	AB
D810	20108354	DIODE BRIDGE GBU4M 4A/1000V 150A(FORMLU)	AB	AE
D811	30009366	DIODE UF5402 3A/200V 150A	AB	AF
D812	30001329	DIODE 1N4007 1A/1000V 30A	AA	AB
D813	30006691	DIODE ZENER 3.3V	AA	AA
D814	30001318	DIODE BA159 1A/800V 20A	AA	AB
D815	30001318	DIODE BA159 1A/800V 20A	AA	AB

REF No.	PARTS	DESCRIPTION	SN CODE	EX CODE
D818	30001318	DIODE BA159 1A/800V 20A	AA	AB
D819	30001285	DIODE 1N4148 SMD	AA	AB
D820	30001285	DIODE 1N4148 SMD	AA	AB
D821	30001285	DIODE 1N4148 SMD	AA	AB
D822	30009699	DIODE ZENER SMD BZT55C12	AA	AB
D823	30001285	DIODE 1N4148 SMD	AA	AB
D824	30009366	DIODE UF5402 3A/200V 150A	AB	AF
D827	30007763	DIODE ZENER SMD BZT55C5V1	AA	AB
D829	30001318	DIODE BA159 1A/800V 20A	AA	AB
D830	30001285	DIODE 1N4148 SMD	AA	AB
D831	30001329	DIODE 1N4007 1A/1000V 30A	AA	AB
D901	30001318	DIODE BA159 1A/800V 20A	AA	AB
D902	30001318	DIODE BA159 1A/800V 20A	AA	AB
D903	30001318	DIODE BA159 1A/800V 20A	AA	AB
D904	30001318	DIODE BA159 1A/800V 20A	AA	AB
D905	30001284	DIODE 1N4148 0.15A/100V 0.5A	AA	AB
D906	30001284	DIODE 1N4148 0.15A/100V 0.5A	AA	AB
D907	30001284	DIODE 1N4148 0.15A/100V 0.5A	AA	AB
D910	30006918	DIODE BAV21 0.25A/200V 1A	AA	AB
D911	30006918	DIODE BAV21 0.25A/200V 1A	AA	AB
D951	30001285	DIODE 1N4148 SMD	AA	AB
D965	30007763	DIODE ZENER SMD BZT55C5V1	AA	AB
D966	30007763	DIODE ZENER SMD BZT55C5V1	AA	AB
D967	30007763	DIODE ZENER SMD BZT55C5V1	AA	AB
D968	30007763	DIODE ZENER SMD BZT55C5V1	AA	AB
D969	30007763	DIODE ZENER SMD BZT55C5V1	AA	AB
D970	30007763	DIODE ZENER SMD BZT55C5V1	AA	AB
D971	30007763	DIODE ZENER SMD BZT55C5V1	AA	AB
D972	30007763	DIODE ZENER SMD BZT55C5V1	AA	AB
D973	30007763	DIODE ZENER SMD BZT55C5V1	AA	AB
D974	30007763	DIODE ZENER SMD BZT55C5V1	AA	AB
		PACKAGED CIRCUITS		
X700	30022663	XTAL 13.500 12p HC49U	AA	AD
		COILS		
L100	30001979	FIXED COIL 1UH Q45 M-A	AA	AB
L100	30007771	FIXED COIL 100UH	AA	AE
L1000	30001992	FIXED COIL 10UH Q65 K-A	AA	AB
L1001	30001992	FIXED COIL 10UH Q65 K-A	AA	AB
L101	30001979	FIXED COIL 1UH Q45 M-A	AA	AB
L101	30007757	COIL INJECTION EW 6MH AK28	AC	AH
L101	30023096	FIXED COIL SMD 10uH 2.5A 10x10x4.5mm	AC	AG
L102	30022848	FERRITE SMD 30/100MHz 4A (0603)	AA	AC
L103	30020531	FERRITE SMD (805) BLM21PG221SN1	AA	AA
L104	30019483	COIL BRIDGE 300UH 32KHZ AK52	AD	AM
L104	30020531	FERRITE SMD (805) BLM21PG221SN1	AA	AA
L105	30006712	FERRITE BEAD 3.5X4.7X0.8	AA	AB
L106	30006712	FERRITE BEAD 3.5X4.7X0.8	AA	AB
L107	30001996	FIXED COIL 22UH Q40 K	AA	AB
L107	30020531	FERRITE SMD (805) BLM21PG221SN1	AA	AA
L108	30001996	FIXED COIL 22UH Q40 K	AA	AB
L108	30020531	FERRITE SMD (805) BLM21PG221SN1	AA	AA
L109	30001996	FIXED COIL 22UH Q40 K	AA	AB
L109	30020531	FERRITE SMD (805) BLM21PG221SN1	AA	AA
L112	30018093	COIL SMD 3.3uH (2520)	AA	AC
L113	30018093	COIL SMD 3.3uH (2520)	AA	AC
L114	30018093	COIL SMD 3.3uH (2520)	AA	AC
L115	30020531	FERRITE SMD (805) BLM21PG221SN1	AA	AA
L213	30013413	FERRITE BEAD ACB2012H-300	AA	AB
L214	30013413	FERRITE BEAD ACB2012H-300	AA	AB
L215	30013413	FERRITE BEAD ACB2012H-300	AA	AB
L216	30013413	FERRITE BEAD ACB2012H-300	AA	AB
L217	30013413	FERRITE BEAD ACB2012H-300	AA	AB
L218	30013413	FERRITE BEAD ACB2012H-300	AA	AB
L219	30013413	FERRITE BEAD ACB2012H-300	AA	AB

	REF No.	PARTS	DESCRIPTION	SN CODE	EX CODE
	L220	30013413	FERRITE BEAD ACB2012H-300	AA	AB
	L404	30016162	FERRITE BEAD (0805) BLM21A102FPT	AA	AD
	L405	30016162	FERRITE BEAD (0805) BLM21A102FPT	AA	AD
	L406	30016162	FERRITE BEAD (0805) BLM21A102FPT	AA	AD
	L417	30006712	FERRITE BEAD 3.5X4.7X0.8	AA	AB
	L418	30006712	FERRITE BEAD 3.5X4.7X0.8	AA	AB
	L419	30001960	FERIT BAR 6*20MM AK16	AA	AD
	L420	30001960	FERIT BAR 6*20MM AK16	AA	AD
	L420	30016162	FERRITE BEAD (0805) BLM21A102FPT	AA	AD
	L421	30016162	FERRITE BEAD (0805) BLM21A102FPT	AA	AD
	L422	30016162	FERRITE BEAD (0805) BLM21A102FPT	AA	AD
	L423	30016162	FERRITE BEAD (0805) BLM21A102FPT	AA	AD
	L424	30016162	FERRITE BEAD (0805) BLM21A102FPT	AA	AD
	L426	30016162	FERRITE BEAD (0805) BLM21A102FPT	AA	AD
	L428	30020531	FERRITE SMD (805) BLM21PG221SN1	AA	AA
	L429	30020531	FERRITE SMD (805) BLM21PG221SN1	AA	AA
	L430	30020531	FERRITE SMD (805) BLM21PG221SN1	AA	AA
	L431	30016162	FERRITE BEAD (0805) BLM21A102FPT	AA	AD
	L432	30020531	FERRITE SMD (805) BLM21PG221SN1	AA	AA
	L439	30016162	FERRITE BEAD (0805) BLM21A102FPT	AA	AD
	L440	30016162	FERRITE BEAD (0805) BLM21A102FPT	AA	AD
	L441	30020531	FERRITE SMD (805) BLM21PG221SN1	AA	AA
	L442	30020531	FERRITE SMD (805) BLM21PG221SN1	AA	AA
	L443	30016162	FERRITE BEAD (0805) BLM21A102FPT	AA	AD
	L447	30016162	FERRITE BEAD (0805) BLM21A102FPT	AA	AD
	L448	30016162	FERRITE BEAD (0805) BLM21A102FPT	AA	AD
	L456	30020936	COIL SMD 10UH 300mA WINDING TYPE(1210)	AA	AC
	L457	30018093	COIL SMD 3.3uH (2520)	AA	AC
	L458	30020936	COIL SMD 10UH 300mA WINDING TYPE(1210)	AA	AC
	L462	30020531	FERRITE SMD (805) BLM21PG221SN1	AA	AA
	L464	30028986	COIL SMD .220UH WINDING	AA	AC
	L700	30020531	FERRITE SMD (805) BLM21PG221SN1	AA	AA
	L701	30020531	FERRITE SMD (805) BLM21PG221SN1	AA	AA
	L702	30020531	FERRITE SMD (805) BLM21PG221SN1	AA	AA
	L703	30020531	FERRITE SMD (805) BLM21PG221SN1	AA	AA
	L704	30020531	FERRITE SMD (805) BLM21PG221SN1	AA	AA
	L706	30016162	FERRITE BEAD (0805) BLM21A102FPT	AA	AD
	L707	30016162	FERRITE BEAD (0805) BLM21A102FPT	AA	AD
	L710	30020531	FERRITE SMD (805) BLM21PG221SN1	AA	AA
	L711	30020531	FERRITE SMD (805) BLM21PG221SN1	AA	AA
	L712	30020531	FERRITE SMD (805) BLM21PG221SN1	AA	AA
	L713	30020531	FERRITE SMD (805) BLM21PG221SN1	AA	AA
	L714	30020531	FERRITE SMD (805) BLM21PG221SN1	AA	AA
	L715	30020531	FERRITE SMD (805) BLM21PG221SN1	AA	AA
	L717	30020531	FERRITE SMD (805) BLM21PG221SN1	AA	AA
	L718	30020531	FERRITE SMD (805) BLM21PG221SN1	AA	AA
	L719	30020531	FERRITE SMD (805) BLM21PG221SN1	AA	AA
	L720	30020531	FERRITE SMD (805) BLM21PG221SN1	AA	AA
	L721	30020531	FERRITE SMD (805) BLM21PG221SN1	AA	AA
	L722	30020936	COIL SMD 10UH 300mA WINDING TYPE(1210)	AA	AC
	L723	30020936	COIL SMD 10UH 300mA WINDING TYPE(1210)	AA	AC
	L724	30020936	COIL SMD 10UH 300mA WINDING TYPE(1210)	AA	AC
	L728	30016162	FERRITE BEAD (0805) BLM21A102FPT	AA	AD
	L729	30016162	FERRITE BEAD (0805) BLM21A102FPT	AA	AD
	L730	30016162	FERRITE BEAD (0805) BLM21A102FPT	AA	AD
	L802	30001971	FERRITE BEAT (805) BLM21A601S	AA	AD
	L803	30001992	FIXED COIL 10UH Q65 K-A	AA	AB
⚠	L805	30018078	LINE FILTER SAFE 2X22MH (AK37)	AA	AB
	L951	30001979	FIXED COIL 1UH Q45 M-A	AA	AB
			CERAMIC FILTERS		
	Z400	30001692	FILTER SAW OFWK3953M	AH	AV
	Z401	30012545	FILTER SAW K9656M	AG	AR
			TRANSFORMERS		
	TR100	30006743	TRF. HORIZONTAL DRIVER 15AK17-17"	AC	AH

	REF No.	PARTS	DESCRIPTION	SN CODE	EX CODE
⚠	TR101	30017521	TRF FBT SAFESINGLECOMMONFOCUSLAYER(AK41)	AS	BD
⚠	TR801	30019205	TRF SMPS SAFE AK52 (170-270V) 170W	AK	AW
⚠	.	30018270	TRF PFC SAFE 1,7A 43MH 170W	AM	AX
			CAPACITORS		
	C100	30000190	CAP CER 100PF 50V J CH	AA	AB
	C100	30000294	CAP SMD 100NF 50V K (0805)	AA	AB
	C101	30000190	CAP CER 100PF 50V J CH	AA	AB
	C101	30000353	CAP EL 100UF 25V M	AA	AB
	C102	30000190	CAP CER 100PF 50V J CH	AA	AB
	C102	30010517	CAP MKT 33NF 100V K	AA	AB
	C102	30000352	CAP EL 100UF 16V M	AA	AB
	C103	30000190	CAP CER 100PF 50V J CH	AA	AB
	C103	30016654	CAP SMD 100NF 16V K R (0603)	AA	AB
	C104	30000345	CAP EL 10UF 50V M	AA	AB
	C104	30000352	CAP EL 100UF 16V M	AA	AB
	C105	30000433	CAP CER 1NF 1KV M B	AA	AB
	C105	30012590	CAP SMD 47NF 50V K (0603)	AA	AA
	C105	30000352	CAP EL 100UF 16V M	AA	AB
	C106	30000290	CAP CER 10NF 50V Z F	AA	AB
	C106	30000362	CAP EL 1UF 50V M	AA	AB
	C107	30000290	CAP CER 10NF 50V Z F	AA	AB
	C107	30000346	CAP EL 10UF 100V M	AA	AB
	C107	30000407	CAP EL 470UF 16V M	AA	AC
	C108	30012567	CAP SMD 220PF 50V J (0603)	AA	AB
	C108	30016654	CAP SMD 100NF 16V K R (0603)	AA	AB
	C109	30000371	CAP EL 22UF 50V M	AA	AB
⚠	C109	30000140	CAP MKP 1.8NF 2KV %3.5	AA	AE
	C109	30000352	CAP EL 100UF 16V M	AA	AB
⚠	C110	30023480	CAP MKP 10NF 2KV %3.5	AB	AF
⚠	C111	30012003	CAP MKP SAFE 18NF 630V J	AA	AC
⚠	C112	30000172	CAP MKP SAFE 680NF 250V J (P=15)	AC	AH
	C112	30000352	CAP EL 100UF 16V M	AA	AB
	C113	30000415	CAP EL 4.7UF 250V M	AA	AC
	C113	30000352	CAP EL 100UF 16V M	AA	AB
⚠	C114	30000167	CAP MKP SAFE 560NF 250V J	AC	AK
	C114	30016654	CAP SMD 100NF 16V K R (0603)	AA	AB
	C115	30028072	CAP EL 100UF 200V M (HR)	AE	AQ
	C116	30000431	CAP CER 100PF 1KV M	AA	AC
	C116	30000352	CAP EL 100UF 16V M	AA	AB
	C117	30000350	CAP EL 10UF 250V M	AA	AD
	C117	30016654	CAP SMD 100NF 16V K R (0603)	AA	AB
	C118	30016654	CAP SMD 100NF 16V K R (0603)	AA	AB
	C119	30000402	CAP EL 47UF 100V M	AA	AB
	C119	30016654	CAP SMD 100NF 16V K R (0603)	AA	AB
	C120	30000360	CAP EL 1000UF 25V M	AA	AE
	C120	30016654	CAP SMD 100NF 16V K R (0603)	AA	AB
	C124	30000360	CAP EL 1000UF 25V M	AA	AE
	C124	30000352	CAP EL 100UF 16V M	AA	AB
	C125	30000294	CAP SMD 100NF 50V K (0805)	AA	AB
	C125	30022244	CAP SMD 100PF 50V J (402)	AA	AA
	C126	30000294	CAP SMD 100NF 50V K (0805)	AA	AB
	C126	30000352	CAP EL 100UF 16V M	AA	AB
	C127	30022242	CAP SMD 68PF 50V J (402)	AA	AA
	C128	30000296	CAP CER 100NF 100V Z F	AA	AB
	C129	30000078	CAP MKT 1UF 100V M	AB	AF
	C130	30000271	CAP CER 680PF 50V J SL	AA	AA
	C131	30000298	CAP CER 1.5NF 50V K B	AA	AD
	C132	30000078	CAP MKT 1UF 100V M	AB	AF
	C133	30000353	CAP EL 100UF 25V M	AA	AB
	C134	30000393	CAP EL 3.3UF 50V M	AA	AB
	C135	30019641	CAP MKT 100NF 100V J NO-HIT	AA	AB
	C136	30000353	CAP EL 100UF 25V M	AA	AB
	C137	30000294	CAP SMD 100NF 50V K (0805)	AA	AB
	C138	30000294	CAP SMD 100NF 50V K (0805)	AA	AB
	C139	30000400	CAP EL 47UF 50V M	AA	AB

REF No.	PARTS	DESCRIPTION	SN CODE	EX CODE
C140	30012581	CAP SMD 1NF 50V K R (0603)	AA	AB
C141	30000415	CAP EL 4.7UF 250V M	AA	AC
C142	30000074	CAP MKT 100NF 63V J	AA	AC
C144	30000104	CAP MKT 4.7NF 100V J	AA	AB
C145	30000286	CAP CER 1NF 500V K B	AA	AB
C146	30000296	CAP CER 100NF 100V Z F	AA	AB
C148	30000296	CAP CER 100NF 100V Z F	AA	AB
C149	30000107	CAP MKT 47NF 250V J	AA	AD
C154	30007708	CAP CER 1NF 1KV K (PULSE)	AA	AD
C155	30007308	CAP CER 220PF 1KV K (PULSE)	AA	AD
C233	30012592	CAP SMD 6.8NF 50V K (0603)	AA	AA
C235	30012592	CAP SMD 6.8NF 50V K (0603)	AA	AA
C236	30012592	CAP SMD 6.8NF 50V K (0603)	AA	AA
C237	30012592	CAP SMD 6.8NF 50V K (0603)	AA	AA
C239	30012607	CAP SMD 150PF 50V J (0603)	AA	AA
C240	30012581	CAP SMD 1NF 50V K R (0603)	AA	AB
C241	30012607	CAP SMD 150PF 50V J (0603)	AA	AA
C243	30012589	CAP SMD 4.7NF 50V K (0603)	AA	AB
C244	30012589	CAP SMD 4.7NF 50V K (0603)	AA	AB
C246	30012607	CAP SMD 150PF 50V J (0603)	AA	AA
C247	30012589	CAP SMD 4.7NF 50V K (0603)	AA	AB
C248	30012607	CAP SMD 150PF 50V J (0603)	AA	AA
C249	30012581	CAP SMD 1NF 50V K R (0603)	AA	AB
C251	30012589	CAP SMD 4.7NF 50V K (0603)	AA	AB
C252	30012569	CAP SMD 33PF 50V J (0603)	AA	AA
C253	30012569	CAP SMD 33PF 50V J (0603)	AA	AA
C256	30012569	CAP SMD 33PF 50V J (0603)	AA	AA
C261	30012607	CAP SMD 150PF 50V J (0603)	AA	AA
C262	30012569	CAP SMD 33PF 50V J (0603)	AA	AA
C263	30012569	CAP SMD 33PF 50V J (0603)	AA	AA
C266	30012569	CAP SMD 33PF 50V J (0603)	AA	AA
C267	30012569	CAP SMD 33PF 50V J (0603)	AA	AA
C301	30000284	CAP SMD 1NF 50V K R (0805)	AA	AB
C404	30012560	CAP SMD 100PF 50V J (0603)	AA	AB
C405	30000074	CAP MKT 100NF 63V J	AA	AC
C406	30012568	CAP SMD 270PF 50V J (0603)	AA	AA
C407	30012585	CAP SMD 2.2NF 50V K R (0603)	AA	AB
C407	30012560	CAP SMD 100PF 50V J (0603)	AA	AB
C408	30000100	CAP MKT 330NF 63V J	AA	AD
C408	30012560	CAP SMD 100PF 50V J (0603)	AA	AB
C409	30000295	CAP CER 100NF 50V Z F	AA	AB
C410	30000295	CAP CER 100NF 50V Z F	AA	AB
C411	30000100	CAP MKT 330NF 63V J	AA	AD
C411	30012560	CAP SMD 100PF 50V J (0603)	AA	AB
C412	30012560	CAP SMD 100PF 50V J (0603)	AA	AB
C413	30012560	CAP SMD 100PF 50V J (0603)	AA	AB
C414	30012560	CAP SMD 100PF 50V J (0603)	AA	AB
C415	30012585	CAP SMD 2.2NF 50V K R (0603)	AA	AB
C416	30012585	CAP SMD 2.2NF 50V K R (0603)	AA	AB
C417	30012581	CAP SMD 1NF 50V K R (0603)	AA	AB
C418	30012582	CAP SMD 10NF 50V K R (0603)	AA	AA
C419	30012589	CAP SMD 4.7NF 50V K (0603)	AA	AB
C419	30012581	CAP SMD 1NF 50V K R (0603)	AA	AB
C420	30012603	CAP SMD 100NF 25V K R (0603)	AA	AB
C420	30022338	CAP SMD 4.7NF 50V J (402)	AA	AA
C421	30012603	CAP SMD 100NF 25V K R (0603)	AA	AB
C421	30012581	CAP SMD 1NF 50V K R (0603)	AA	AB
C422	30012581	CAP SMD 1NF 50V K R (0603)	AA	AB
C423	30012603	CAP SMD 100NF 25V K R (0603)	AA	AB
C423	30000407	CAP EL 470UF 16V M	AA	AC
C424	30000383	CAP EL 2200UF 25V M	AA	AC
C424	30016654	CAP SMD 100NF 16V K R (0603)	AA	AB
C425	30012582	CAP SMD 10NF 50V K R (0603)	AA	AA
C426	30012568	CAP SMD 270PF 50V J (0603)	AA	AA
C427	30012585	CAP SMD 2.2NF 50V K R (0603)	AA	AB
C427	30016654	CAP SMD 100NF 16V K R (0603)	AA	AB

REF No.	PARTS	DESCRIPTION	SN CODE	EX CODE
C428	30000100	CAP MKT 330NF 63V J	AA	AD
C428	30022244	CAP SMD 100PF 50V J (402)	AA	AA
C429	30000295	CAP CER 100NF 50V Z F	AA	AB
C430	30000295	CAP CER 100NF 50V Z F	AA	AB
C430	30012581	CAP SMD 1NF 50V K R (0603)	AA	AB
C431	30000100	CAP MKT 330NF 63V J	AA	AD
C432	30000383	CAP EL 2200UF 25V M	AA	AC
C432	30022338	CAP SMD 4.7NF 50V J (402)	AA	AA
C433	30012589	CAP SMD 4.7NF 50V K (0603)	AA	AB
C433	30012581	CAP SMD 1NF 50V K R (0603)	AA	AB
C434	30016654	CAP SMD 100NF 16V K R (0603)	AA	AB
C436	30016654	CAP SMD 100NF 16V K R (0603)	AA	AB
C437	30012582	CAP SMD 10NF 50V K R (0603)	AA	AA
C438	30012582	CAP SMD 10NF 50V K R (0603)	AA	AA
C439	30016654	CAP SMD 100NF 16V K R (0603)	AA	AB
C442	30016126	CAP SMD 220NF 16V K R (0603)	AA	AB
C443	30016126	CAP SMD 220NF 16V K R (0603)	AA	AB
C446	30016654	CAP SMD 100NF 16V K R (0603)	AA	AB
C448	30012570	CAP SMD 330PF 50V J (0603)	AA	AA
C450	30000384	CAP EL 2.2UF 50V M	AA	AB
C451	30010571	CAP EL 10UF 16V M	AA	AA
C452	30016126	CAP SMD 220NF 16V K R (0603)	AA	AB
C455	30012603	CAP SMD 100NF 25V K R (0603)	AA	AB
C455	30016654	CAP SMD 100NF 16V K R (0603)	AA	AB
C456	30012603	CAP SMD 100NF 25V K R (0603)	AA	AB
C456	30012574	CAP SMD 470PF 50V J (0603)	AA	AA
C457	30016654	CAP SMD 100NF 16V K R (0603)	AA	AB
C458	30012603	CAP SMD 100NF 25V K R (0603)	AA	AB
C458	30016126	CAP SMD 220NF 16V K R (0603)	AA	AB
C459	30016126	CAP SMD 220NF 16V K R (0603)	AA	AB
C460	30016126	CAP SMD 220NF 16V K R (0603)	AA	AB
C461	30000384	CAP EL 2.2UF 50V M	AA	AB
C462	30000353	CAP EL 100UF 25V M	AA	AB
C462	30012574	CAP SMD 470PF 50V J (0603)	AA	AA
C463	30000353	CAP EL 100UF 25V M	AA	AB
C463	30000384	CAP EL 2.2UF 50V M	AA	AB
C464	30000353	CAP EL 100UF 25V M	AA	AB
C465	30000353	CAP EL 100UF 25V M	AA	AB
C465	30016654	CAP SMD 100NF 16V K R (0603)	AA	AB
C467	30012574	CAP SMD 470PF 50V J (0603)	AA	AA
C468	30000352	CAP EL 100UF 16V M	AA	AB
C468	30016654	CAP SMD 100NF 16V K R (0603)	AA	AB
C469	30000069	CAP MKT 1NF 100V J	AA	AC
C469	30012574	CAP SMD 470PF 50V J (0603)	AA	AA
C470	30000069	CAP MKT 1NF 100V J	AA	AC
C470	30016654	CAP SMD 100NF 16V K R (0603)	AA	AB
C471	30000433	CAP CER 1NF 1KV M B	AA	AB
C471	30016654	CAP SMD 100NF 16V K R (0603)	AA	AB
C472	30000069	CAP MKT 1NF 100V J	AA	AC
C472	30012574	CAP SMD 470PF 50V J (0603)	AA	AA
C473	30000069	CAP MKT 1NF 100V J	AA	AC
C473	30016654	CAP SMD 100NF 16V K R (0603)	AA	AB
C474	30000433	CAP CER 1NF 1KV M B	AA	AB
C474	30012574	CAP SMD 470PF 50V J (0603)	AA	AA
C475	30000092	CAP MKT 220NF 63V J	AA	AD
C477	30016654	CAP SMD 100NF 16V K R (0603)	AA	AB
C478	30016654	CAP SMD 100NF 16V K R (0603)	AA	AB
C479	30000106	CAP MKT 47NF 100V J	AA	AB
C479	30016654	CAP SMD 100NF 16V K R (0603)	AA	AB
C480	30000106	CAP MKT 47NF 100V J	AA	AB
C480	30012581	CAP SMD 1NF 50V K R (0603)	AA	AB
C482	30016654	CAP SMD 100NF 16V K R (0603)	AA	AB
C483	30016654	CAP SMD 100NF 16V K R (0603)	AA	AB
C484	30016654	CAP SMD 100NF 16V K R (0603)	AA	AB
C485	30016654	CAP SMD 100NF 16V K R (0603)	AA	AB
C486	30016654	CAP SMD 100NF 16V K R (0603)	AA	AB

	REF No.	PARTS	DESCRIPTION	SN CODE	EX CODE
	C487	30016654	CAP SMD 100NF 16V K R (0603)	AA	AB
	C489	30016126	CAP SMD 220NF 16V K R (0603)	AA	AB
	C490	30012610	CAP SMD 10NF 50V J (0603)	AA	AB
	C493	30016654	CAP SMD 100NF 16V K R (0603)	AA	AB
	C494	30016126	CAP SMD 220NF 16V K R (0603)	AA	AB
	C498	30010571	CAP EL 10UF 16V M	AA	AA
	C499	30016126	CAP SMD 220NF 16V K R (0603)	AA	AB
	C500	30016654	CAP SMD 100NF 16V K R (0603)	AA	AB
	C501	30016126	CAP SMD 220NF 16V K R (0603)	AA	AB
	C502	30016654	CAP SMD 100NF 16V K R (0603)	AA	AB
	C503	30012581	CAP SMD 1NF 50V K R (0603)	AA	AB
	C505	30012581	CAP SMD 1NF 50V K R (0603)	AA	AB
	C508	30012581	CAP SMD 1NF 50V K R (0603)	AA	AB
	C514	30010571	CAP EL 10UF 16V M	AA	AA
	C515	30010571	CAP EL 10UF 16V M	AA	AA
	C518	30010571	CAP EL 10UF 16V M	AA	AA
	C520	30022242	CAP SMD 68PF 50V J (402)	AA	AA
	C521	30022242	CAP SMD 68PF 50V J (402)	AA	AA
	C522	30022242	CAP SMD 68PF 50V J (402)	AA	AA
	C523	30012581	CAP SMD 1NF 50V K R (0603)	AA	AB
	C524	30012581	CAP SMD 1NF 50V K R (0603)	AA	AB
	C525	30012560	CAP SMD 100PF 50V J (0603)	AA	AB
	C535	30016126	CAP SMD 220NF 16V K R (0603)	AA	AB
	C536	30000352	CAP EL 100UF 16V M	AA	AB
	C541	30010571	CAP EL 10UF 16V M	AA	AA
	C542	30022201	CAP SMD 1.2NF 50V J (402)	AA	AA
	C543	30022201	CAP SMD 1.2NF 50V J (402)	AA	AA
	C544	30016654	CAP SMD 100NF 16V K R (0603)	AA	AB
	C547	30000352	CAP EL 100UF 16V M	AA	AB
	C548	30016654	CAP SMD 100NF 16V K R (0603)	AA	AB
	C549	30016654	CAP SMD 100NF 16V K R (0603)	AA	AB
	C550	30016654	CAP SMD 100NF 16V K R (0603)	AA	AB
	C551	30000362	CAP EL 1UF 50V M	AA	AB
	C552	30022242	CAP SMD 68PF 50V J (402)	AA	AA
	C700	30000371	CAP EL 22UF 50V M	AA	AB
	C701	30000371	CAP EL 22UF 50V M	AA	AB
	C702	30022242	CAP SMD 68PF 50V J (402)	AA	AA
	C704	30016654	CAP SMD 100NF 16V K R (0603)	AA	AB
	C705	30022242	CAP SMD 68PF 50V J (402)	AA	AA
	C706	30000371	CAP EL 22UF 50V M	AA	AB
	C707	30000371	CAP EL 22UF 50V M	AA	AB
	C708	30016654	CAP SMD 100NF 16V K R (0603)	AA	AB
	C710	30016654	CAP SMD 100NF 16V K R (0603)	AA	AB
	C711	30016654	CAP SMD 100NF 16V K R (0603)	AA	AB
	C713	30000352	CAP EL 100UF 16V M	AA	AB
	C714	30000352	CAP EL 100UF 16V M	AA	AB
	C715	30016654	CAP SMD 100NF 16V K R (0603)	AA	AB
	C716	30012581	CAP SMD 1NF 50V K R (0603)	AA	AB
	C717	30016654	CAP SMD 100NF 16V K R (0603)	AA	AB
	C718	30016654	CAP SMD 100NF 16V K R (0603)	AA	AB
	C719	30016654	CAP SMD 100NF 16V K R (0603)	AA	AB
	C720	30016654	CAP SMD 100NF 16V K R (0603)	AA	AB
	C721	30016654	CAP SMD 100NF 16V K R (0603)	AA	AB
	C722	30016654	CAP SMD 100NF 16V K R (0603)	AA	AB
	C723	30012581	CAP SMD 1NF 50V K R (0603)	AA	AB
	C725	30016654	CAP SMD 100NF 16V K R (0603)	AA	AB
	C726	30016654	CAP SMD 100NF 16V K R (0603)	AA	AB
	C727	30016654	CAP SMD 100NF 16V K R (0603)	AA	AB
	C728	30016654	CAP SMD 100NF 16V K R (0603)	AA	AB
	C729	30000352	CAP EL 100UF 16V M	AA	AB
	C730	30016654	CAP SMD 100NF 16V K R (0603)	AA	AB
	C732	30016654	CAP SMD 100NF 16V K R (0603)	AA	AB
	C734	30016654	CAP SMD 100NF 16V K R (0603)	AA	AB
	C735	30016654	CAP SMD 100NF 16V K R (0603)	AA	AB
	C736	30016654	CAP SMD 100NF 16V K R (0603)	AA	AB
	C738	30016654	CAP SMD 100NF 16V K R (0603)	AA	AB

	REF No.	PARTS	DESCRIPTION	SN CODE	EX CODE
	C739	30016654	CAP SMD 100NF 16V K R (0603)	AA	AB
	C740	30016654	CAP SMD 100NF 16V K R (0603)	AA	AB
	C742	30016654	CAP SMD 100NF 16V K R (0603)	AA	AB
	C744	30016654	CAP SMD 100NF 16V K R (0603)	AA	AB
	C745	30016654	CAP SMD 100NF 16V K R (0603)	AA	AB
	C747	30016654	CAP SMD 100NF 16V K R (0603)	AA	AB
	C748	30016654	CAP SMD 100NF 16V K R (0603)	AA	AB
	C749	30016654	CAP SMD 100NF 16V K R (0603)	AA	AB
	C751	30016654	CAP SMD 100NF 16V K R (0603)	AA	AB
	C752	30012560	CAP SMD 100PF 50V J (0603)	AA	AB
	C753	30012560	CAP SMD 100PF 50V J (0603)	AA	AB
	C754	30016654	CAP SMD 100NF 16V K R (0603)	AA	AB
	C755	30016654	CAP SMD 100NF 16V K R (0603)	AA	AB
	C757	30012581	CAP SMD 1NF 50V K R (0603)	AA	AB
	C758	30012581	CAP SMD 1NF 50V K R (0603)	AA	AB
	C759	30016654	CAP SMD 100NF 16V K R (0603)	AA	AB
	C760	30016654	CAP SMD 100NF 16V K R (0603)	AA	AB
	C761	30012610	CAP SMD 10NF 50V J (0603)	AA	AB
	C762	30016654	CAP SMD 100NF 16V K R (0603)	AA	AB
	C763	30016654	CAP SMD 100NF 16V K R (0603)	AA	AB
	C764	30016654	CAP SMD 100NF 16V K R (0603)	AA	AB
	C765	30016654	CAP SMD 100NF 16V K R (0603)	AA	AB
	C766	30000352	CAP EL 100UF 16V M	AA	AB
	C767	30012610	CAP SMD 10NF 50V J (0603)	AA	AB
	C769	30012581	CAP SMD 1NF 50V K R (0603)	AA	AB
	C770	30016654	CAP SMD 100NF 16V K R (0603)	AA	AB
	C772	30000352	CAP EL 100UF 16V M	AA	AB
	C773	30022338	CAP SMD 4.7NF 50V J (402)	AA	AA
	C774	30012581	CAP SMD 1NF 50V K R (0603)	AA	AB
	C775	30012581	CAP SMD 1NF 50V K R (0603)	AA	AB
	C776	30012581	CAP SMD 1NF 50V K R (0603)	AA	AB
	C777	30012581	CAP SMD 1NF 50V K R (0603)	AA	AB
	C780	30012590	CAP SMD 47NF 50V K (0603)	AA	AA
	C781	30012581	CAP SMD 1NF 50V K R (0603)	AA	AB
	C782	30022242	CAP SMD 68PF 50V J (402)	AA	AA
	C783	30012590	CAP SMD 47NF 50V K (0603)	AA	AA
	C784	30012581	CAP SMD 1NF 50V K R (0603)	AA	AB
	C785	30012581	CAP SMD 1NF 50V K R (0603)	AA	AB
	C786	30012581	CAP SMD 1NF 50V K R (0603)	AA	AB
	C787	30012566	CAP SMD 22PF 50V J (0603)	AA	AB
	C788	30016654	CAP SMD 100NF 16V K R (0603)	AA	AB
	C789	30016654	CAP SMD 100NF 16V K R (0603)	AA	AB
	C790	30000413	CAP EL 4.7UF 50V M	AA	AB
	C792	30022244	CAP SMD 100PF 50V J (402)	AA	AA
	C794	30012566	CAP SMD 22PF 50V J (0603)	AA	AB
	C795	30012566	CAP SMD 22PF 50V J (0603)	AA	AB
	C799	30016654	CAP SMD 100NF 16V K R (0603)	AA	AB
	C800	30016654	CAP SMD 100NF 16V K R (0603)	AA	AB
⚠	C801	30000094	CAP MKT SAFE 220NF 275V M AC	AA	AB
⚠	C802	30007755	CAP MKT SAFE 680NF 275V M AC X2	AB	AG
	C803	30000294	CAP SMD 100NF 50V K (0805)	AA	AB
	C803	30000352	CAP EL 100UF 16V M	AA	AB
	C804	30000387	CAP EL 33UF 50V M	AA	AB
⚠	C805	30000161	CAP MKP SAFE 47NF 630V J	AB	AE
	C806	30007308	CAP CER 220PF 1KV K (PULSE)	AA	AD
	C806	30022233	CAP SMD 12PF 50V J (402)	AA	AA
	C807	30000422	CAP EL 330UF 400V M	AK	AV
	C807	30016654	CAP SMD 100NF 16V K R (0603)	AA	AB
	C808	30016654	CAP SMD 100NF 16V K R (0603)	AA	AB
	C809	30009208	CAP CER 470PF 1KV K (PULSE)	AA	AC
	C809	30012610	CAP SMD 10NF 50V J (0603)	AA	AB
⚠	C810	30000440	CAP CER SAFE 2.2NF 4KV M	AA	AC
	C810	30016654	CAP SMD 100NF 16V K R (0603)	AA	AB
	C811	30000309	CAP SMD 2.2NF 50V K R 0805	AA	AB
	C812	30000099	CAP MKT 33NF 63V J	AA	AB
	C813	30007308	CAP CER 220PF 1KV K (PULSE)	AA	AD

	REF No.	PARTS	DESCRIPTION	SN CODE	EX CODE
	C814	30007308	CAP CER 220PF 1KV K (PULSE)	AA	AD
	C814	30016654	CAP SMD 100NF 16V K R (0603)	AA	AB
	C815	30007308	CAP CER 220PF 1KV K (PULSE)	AA	AD
	C815	30016654	CAP SMD 100NF 16V K R (0603)	AA	AB
	C816	30028072	CAP EL 100UF 200V M (HR)	AE	AQ
	C817	30000294	CAP SMD 100NF 50V K (0805)	AA	AB
	C817	30012610	CAP SMD 10NF 50V J (0603)	AA	AB
	C818	30000294	CAP SMD 100NF 50V K (0805)	AA	AB
	C818	30012574	CAP SMD 470PF 50V J (0603)	AA	AA
	C821	30000383	CAP EL 2200UF 25V M	AA	AC
	C822	30000383	CAP EL 2200UF 25V M	AA	AC
	C823	30000294	CAP SMD 100NF 50V K (0805)	AA	AB
	C824	30000295	CAP CER 100NF 50V Z F	AA	AB
	C824	30012590	CAP SMD 47NF 50V K (0603)	AA	AA
	C825	30000383	CAP EL 2200UF 25V M	AA	AC
	C825	30012590	CAP SMD 47NF 50V K (0603)	AA	AA
	C826	30000383	CAP EL 2200UF 25V M	AA	AC
	C826	30016654	CAP SMD 100NF 16V K R (0603)	AA	AB
	C827	30000294	CAP SMD 100NF 50V K (0805)	AA	AB
	C827	30016654	CAP SMD 100NF 16V K R (0603)	AA	AB
	C828	30000400	CAP EL 47UF 50V M	AA	AB
	C831	30000295	CAP CER 100NF 50V Z F	AA	AB
	C831	30016654	CAP SMD 100NF 16V K R (0603)	AA	AB
	C832	30016654	CAP SMD 100NF 16V K R (0603)	AA	AB
	C833	30000362	CAP EL 1UF 50V M	AA	AB
	C834	30000411	CAP EL 4700UF 16V M	AC	AH
	C834	30016654	CAP SMD 100NF 16V K R (0603)	AA	AB
	C835	30022244	CAP SMD 100PF 50V J (402)	AA	AA
	C836	30022244	CAP SMD 100PF 50V J (402)	AA	AA
	C837	30000367	CAP EL 1UF 250V M	AA	AB
	C837	30000352	CAP EL 100UF 16V M	AA	AB
	C839	30012581	CAP SMD 1NF 50V K R (0603)	AA	AB
	C840	30000352	CAP EL 100UF 16V M	AA	AB
	C840	30022250	CAP SMD 330PF 50V K (402)	AA	AA
	C841	30022250	CAP SMD 330PF 50V K (402)	AA	AA
	C842	30000360	CAP EL 1000UF 25V M	AA	AE
	C842	30022250	CAP SMD 330PF 50V K (402)	AA	AA
	C843	30000433	CAP CER 1NF 1KV M B	AA	AB
	C843	30016654	CAP SMD 100NF 16V K R (0603)	AA	AB
	C844	30016654	CAP SMD 100NF 16V K R (0603)	AA	AB
	C845	30000393	CAP EL 3.3UF 50V M	AA	AB
	C845	30016654	CAP SMD 100NF 16V K R (0603)	AA	AB
	C846	30000294	CAP SMD 100NF 50V K (0805)	AA	AB
	C846	30016654	CAP SMD 100NF 16V K R (0603)	AA	AB
	C848	30016654	CAP SMD 100NF 16V K R (0603)	AA	AB
⚠	C850	30000440	CAP CER SAFE 2.2NF 4KV M	AA	AC
	C851	30000360	CAP EL 1000UF 25V M	AA	AE
	C852	30012567	CAP SMD 220PF 50V J (0603)	AA	AB
	C857	30000375	CAP EL 220UF 16V M	AA	AB
	C858	30016654	CAP SMD 100NF 16V K R (0603)	AA	AB
	C860	30000433	CAP CER 1NF 1KV M B	AA	AB
	C861	30000075	CAP MKT 100NF 250V K (DC)	AA	AD
	C862	30000367	CAP EL 1UF 250V M	AA	AB
	C864	30000190	CAP CER 100PF 50V J CH	AA	AB
	C867	30012574	CAP SMD 470PF 50V J (0603)	AA	AA
	C868	30000436	CAP CER 10NF 1KV ZE	AA	AC
	C900	30000075	CAP MKT 100NF 250V K (DC)	AA	AD
	C902	30000415	CAP EL 4.7UF 250V M	AA	AC
⚠	C903	30006841	CAP MKP 1.2NF 1.6KV J	AA	AE
	C904	30000330	CAP CER 4.7NF 50V K B	AA	AB
	C905	30000350	CAP EL 10UF 250V M	AA	AD
	C906	30000075	CAP MKT 100NF 250V K (DC)	AA	AD
	C909	30000071	CAP MKT 10NF 63V J	AA	AB
	C910	30000104	CAP MKT 4.7NF 100V J	AA	AB
	C911	30000104	CAP MKT 4.7NF 100V J	AA	AB
⚠	C912	30000131	CAP MKP SAFE 100NF 250V J	AA	AB

	REF No.	PARTS	DESCRIPTION	SN CODE	EX CODE
	C914	30000388	CAP EL 33UF 160V M	AB	AF
	C915	30000075	CAP MKT 100NF 250V K (DC)	AA	AD
	C917	30000295	CAP CER 100NF 50V Z F	AA	AB
	C918	30000352	CAP EL 100UF 16V M	AA	AB
	C925	30000191	CAP CER 100PF 50V J SL	AA	AB
	C931	30000075	CAP MKT 100NF 250V K (DC)	AA	AD
	C932	30000225	CAP CER 220PF 50V J SL	AA	AB
	C934	30000107	CAP MKT 47NF 250V J	AA	AD
	C938	30000074	CAP MKT 100NF 63V J	AA	AC
	C939	30000352	CAP EL 100UF 16V M	AA	AB
	C940	30000352	CAP EL 100UF 16V M	AA	AB
	C941	30000106	CAP MKT 47NF 100V J	AA	AB
	C951	30012603	CAP SMD 100NF 25V K R (0603)	AA	AB
	C953	30000345	CAP EL 10UF 50V M	AA	AB
	C954	30000345	CAP EL 10UF 50V M	AA	AB
	C956	30000400	CAP EL 47UF 50V M	AA	AB
	CXX	30000302	CAP CER 1.8NF 50V KB	AA	AB
			RESISTORS		
	R100	30000689	RES CF 1/4W 3.9K J	AA	AB
	R101	30000526	RES CF 1/4W 1.5K J	AA	AB
	R101	30018581	RES MO 2W 150R J	AA	AA
	R101	30021996	RES SMD 1/16W 10K J (0402)	AA	AA
	R102	30000594	RES CF 1/4W 22K J	AA	AB
	R102	30000529	RES SMD 1/10W 1.5K J	AA	AB
	R103	30000770	RES CF 1/4W 680R J	AA	AB
	R103	30001132	RES MO 2W 0.22R J	AA	AB
	R104	30000594	RES CF 1/4W 22K J	AA	AB
	R104	30001079	RES MO 1W 100R J	AA	AA
	R104	30021987	RES SMD 1/16W 4.7K J (0402)	AA	AA
	R105	30000712	RES CF 1/4W 470R J	AA	AB
	R105	30000583	RES CF 1/4W 220R J	AA	AB
	R106	30000712	RES CF 1/4W 470R J	AA	AB
	R106	30022084	RES SMD 1/16W 33K J (0402)	AA	AA
	R107	30000712	RES CF 1/4W 470R J	AA	AB
	R107	30012659	RES SMD 1/16W 2.2K J (0603)	AA	AB
	R107	30022046	RES SMD 1/16W 2.2K J (0402)	AA	AA
	R108	30000650	RES CF 1/4W 33R J	AA	AB
	R108	30000469	RES SMD 1/10W 1K J 0805	AA	AB
	R109	30000650	RES CF 1/4W 33R J	AA	AB
	R109	30012659	RES SMD 1/16W 2.2K J (0603)	AA	AB
	R109	30022042	RES SMD 1/16W 1K J (0402)	AA	AA
	R110	30000471	RES CF 1/4W 10K J	AA	AB
	R110	30000718	RES CF 1/4W 4.7K J	AA	AB
	R110	30022142	RES SMD 1/16W 2.7K F (0402)	AA	AA
	R111	30000808	RES CF 1/4W 82R J	AA	AB
	R111	30012662	RES SMD 1/16W 2.7K J (0603)	AA	AB
	R111	30022896	RES SMD 1/16W 1.2K F (0402)	AA	AA
	R112	30000471	RES CF 1/4W 10K J	AA	AB
	R112	30012662	RES SMD 1/16W 2.7K J (0603)	AA	AB
	R112	30022067	RES SMD 1/16W 6.2K J (0402)	AA	AA
	R113	30000808	RES CF 1/4W 82R J	AA	AB
	R113	30012708	RES SMD 1/16W 68K J (0603)	AA	AA
	R113	30022067	RES SMD 1/16W 6.2K J (0402)	AA	AA
	R114	30022067	RES SMD 1/16W 6.2K J (0402)	AA	AA
	R115	30012659	RES SMD 1/16W 2.2K J (0603)	AA	AB
	R115	30021996	RES SMD 1/16W 10K J (0402)	AA	AA
	R116	30001086	RES MO 2W 10K J	AA	AD
	R116	30021996	RES SMD 1/16W 10K J (0402)	AA	AA
	R118	30000466	RES CF 1/4W 1K J	AA	AB
	R119	30012641	RES SMD 1/16W 10K J (0603)	AA	AB
	R120	30012696	RES SMD 1/16W 47K J (0603)	AA	AB
	R121	30000918	RES MF 1/4W 2.1K F	AA	AB
	R122	30001190	RES MO 2W 68R J	AA	AA
	R123	30000852	RES MF 1/4W 100K F	AA	AB
⚠	R124	30001246	RES FUSE SAFE 1W 0.47R J	AA	AB

	REF No.	PARTS	DESCRIPTION	SN CODE	EX CODE
⚠	R125	30009036	RES FUSE SAFE 1/2W 0.1R J	AA	AC
	R126	30000564	RES CF 1/4W 18K J	AA	AB
	R127	30000718	RES CF 1/4W 4.7K J	AA	AB
⚠	R128	30001246	RES FUSE SAFE 1W 0.47R J	AA	AB
	R129	30000729	RES CF 1/4W 470K J	AA	AB
⚠	R130	30026517	RES FUSE 2W 3.9R J	AA	AB
	R131	30000631	RES SMD 1/10W 2.7K J 0805	AA	AB
	R132	30012712	RES SMD 1/16W 8.2K J (0603)	AA	AB
	R136	30000779	RES CF 1/4W 68K J	AA	AB
	R137	30000942	RES MF 1/4W 27K J	AA	AA
	R138	30000636	RES SMD 1/10W 27K J 0805	AA	AB
	R139	30001110	RES MO 1W 1.5R J	AA	AA
	R140	30001124	RES MO 3W 220R J	AA	AB
	R141	30017136	RES MO 1W 0.56R J	AA	AA
	R142	30001011	RES MF 1/4W 6.8K F	AA	AB
	R143	30001011	RES MF 1/4W 6.8K F	AA	AB
	R145	30001077	RES MO 2W 10R J	AA	AC
	R149	30000660	RES CF 1/4W 3.3K J	AA	AB
	R150	30012665	RES SMD 1/16W 20K J (0603)	AA	AA
	R151	30012641	RES SMD 1/16W 10K J (0603)	AA	AB
	R152	30012689	RES SMD 1/16W 39K J (0603)	AA	AB
	R153	30012673	RES SMD 1/16W 270R J (0603)	AA	AB
	R154	30012673	RES SMD 1/16W 270R J (0603)	AA	AB
	R155	30000784	RES CF 1/4W 680K J	AA	AB
	R156	30001036	RES MF 1/4W 95K F	AA	AA
	R157	30000779	RES CF 1/4W 68K J	AA	AB
	R158	30012641	RES SMD 1/16W 10K J (0603)	AA	AB
	R159	30000721	RES SMD 1/10W 4.7K J	AA	AB
	R160	30000721	RES SMD 1/10W 4.7K J	AA	AB
	R161	30000475	RES SMD 1/10W 10K J 0805	AA	AB
	R162	30000721	RES SMD 1/10W 4.7K J	AA	AB
	R163	30010560	CAP SMD 220NF 25V K R (0805)	AA	AB
	R165	30000622	RES CF 1/4W 270R J	AA	AB
	R166	30000529	RES SMD 1/10W 1.5K J	AA	AB
	R168	30012657	RES SMD 1/16W 1K J (0603)	AA	AB
	R169	30000628	RES CF 1/4W 2.7K J	AA	AB
	R171	30000626	RES SMD 1/10W 270R J	AA	AB
	R179	30000649	RES CF 1/2W 33R J	AA	AB
	R180	30001077	RES MO 2W 10R J	AA	AC
	R181	30001084	RES MO 1W 1K J	AA	AA
	R182	30000689	RES CF 1/4W 3.9K J	AA	AB
⚠	R183	30001244	RES FUSE SAFE 1/2W 0.47R J	AA	AB
	R185	30012692	RES SMD 1/16W 4.7K J (0603)	AA	AB
	R186	30000531	RES CF 1/4W 15K J	AA	AB
	R187	30012655	RES SMD 1/16W 180R J (0603)	AA	AA
	R215	30012668	RES SMD 1/16W 220R J (0603)	AA	AA
	R216	30012707	RES SMD 1/16W 680R J (0603)	AA	AB
	R217	30012668	RES SMD 1/16W 220R J (0603)	AA	AA
	R218	30012707	RES SMD 1/16W 680R J (0603)	AA	AB
	R402	30012510	RES SMD 1/16W 100R J (0603)	AA	AB
	R403	30012682	RES SMD 1/16W 30K J (0603)	AA	AA
	R403	30012510	RES SMD 1/16W 100R J (0603)	AA	AB
	R404	30012657	RES SMD 1/16W 1K J (0603)	AA	AB
	R405	30012657	RES SMD 1/16W 1K J (0603)	AA	AB
	R406	30012691	RES SMD 1/16W 4.3K J (0603)	AA	AA
	R408	30012657	RES SMD 1/16W 1K J (0603)	AA	AB
	R409	30012712	RES SMD 1/16W 8.2K J (0603)	AA	AB
	R409	30012657	RES SMD 1/16W 1K J (0603)	AA	AB
	R410	30012657	RES SMD 1/16W 1K J (0603)	AA	AB
	R411	30012657	RES SMD 1/16W 1K J (0603)	AA	AB
	R412	30022118	RES SMD 1/16W 75R J (0402)	AA	AA
	R415	30014420	RES SMD 1/16W 10K F (0603)	AA	AA
	R415	30021991	RES SMD 1/16W 100R J (0402)	AA	AA
	R417	30012712	RES SMD 1/16W 8.2K J (0603)	AA	AB
	R418	30012698	RES SMD 1/16W 5.6K J (0603)	AA	AB
	R420	30022118	RES SMD 1/16W 75R J (0402)	AA	AA

	REF No.	PARTS	DESCRIPTION	SN CODE	EX CODE
	R421	30022028	RES SMD 1/16W 150R J (0402)	AA	AA
	R422	30012677	RES SMD 1/16W 3.3K J (0603)	AA	AA
	R422	30022052	RES SMD 1/16W 200R J (0402)	AA	AA
	R423	30022118	RES SMD 1/16W 75R J (0402)	AA	AA
	R424	30012657	RES SMD 1/16W 1K J (0603)	AA	AB
	R424	30022118	RES SMD 1/16W 75R J (0402)	AA	AA
	R425	30000459	RES CF 1/4W 100R J	AA	AB
	R425	30021988	RES SMD 1/16W 1.8K J (0402)	AA	AA
	R426	30012510	RES SMD 1/16W 100R J (0603)	AA	AB
	R426	30021977	RES SMD 1/16W 1.2K J (0402)	AA	AA
	R427	30012714	RES SMD 1/16W 820R J (0603)	AA	AA
	R427	30012696	RES SMD 1/16W 47K J (0603)	AA	AB
	R428	30012714	RES SMD 1/16W 820R J (0603)	AA	AA
	R428	30022098	RES SMD 1/16W 390R J (0402)	AA	AA
	R429	30012696	RES SMD 1/16W 47K J (0603)	AA	AB
	R430	30022084	RES SMD 1/16W 33K J (0402)	AA	AA
	R432	30022069	RES SMD 1/16W 6.8K J (0402)	AA	AA
	R433	30022046	RES SMD 1/16W 2.2K J (0402)	AA	AA
	R434	30000815	RES CF 1/4W 8.2K J	AA	AB
	R434	30021447	RES SMD 1/16W 1.6K J (0603)	AA	AA
	R435	30012504	RES SMD 1/16W 1.2K J (0603)	AA	AB
	R436	30012696	RES SMD 1/16W 47K J (0603)	AA	AB
	R437	30022046	RES SMD 1/16W 2.2K J (0402)	AA	AA
	R440	30012696	RES SMD 1/16W 47K J (0603)	AA	AB
	R441	30012696	RES SMD 1/16W 47K J (0603)	AA	AB
	R443	30012696	RES SMD 1/16W 47K J (0603)	AA	AB
	R446	30012696	RES SMD 1/16W 47K J (0603)	AA	AB
	R448	30022042	RES SMD 1/16W 1K J (0402)	AA	AA
	R449	30022113	RES SMD 1/16W 68R J (0402)	AA	AA
	R450	30022113	RES SMD 1/16W 68R J (0402)	AA	AA
	R451	30022042	RES SMD 1/16W 1K J (0402)	AA	AA
	R455	30021991	RES SMD 1/16W 100R J (0402)	AA	AA
	R456	30021991	RES SMD 1/16W 100R J (0402)	AA	AA
	R457	30021991	RES SMD 1/16W 100R J (0402)	AA	AA
	R458	30012510	RES SMD 1/16W 100R J (0603)	AA	AB
	R459	30021991	RES SMD 1/16W 100R J (0402)	AA	AA
	R460	30021991	RES SMD 1/16W 100R J (0402)	AA	AA
	R461	30021991	RES SMD 1/16W 100R J (0402)	AA	AA
	R464	30012714	RES SMD 1/16W 820R J (0603)	AA	AA
	R465	30022118	RES SMD 1/16W 75R J (0402)	AA	AA
	R467	30022118	RES SMD 1/16W 75R J (0402)	AA	AA
	R468	30022118	RES SMD 1/16W 75R J (0402)	AA	AA
	R470	30022118	RES SMD 1/16W 75R J (0402)	AA	AA
	R471	30022118	RES SMD 1/16W 75R J (0402)	AA	AA
	R472	30022118	RES SMD 1/16W 75R J (0402)	AA	AA
	R474	30012696	RES SMD 1/16W 47K J (0603)	AA	AB
	R475	30012510	RES SMD 1/16W 100R J (0603)	AA	AB
	R478	30012510	RES SMD 1/16W 100R J (0603)	AA	AB
	R479	30012510	RES SMD 1/16W 100R J (0603)	AA	AB
	R490	30012662	RES SMD 1/16W 2.7K J (0603)	AA	AB
	R491	30012662	RES SMD 1/16W 2.7K J (0603)	AA	AB
	R493	30012696	RES SMD 1/16W 47K J (0603)	AA	AB
	R499	30022056	RES SMD 1/16W 220R J (0402)	AA	AA
	R500	30022056	RES SMD 1/16W 220R J (0402)	AA	AA
	R509	30021999	RES SMD 1/16W 10R J (0402)	AA	AA
	R511	30021991	RES SMD 1/16W 100R J (0402)	AA	AA
	R512	30021991	RES SMD 1/16W 100R J (0402)	AA	AA
	R513	30021996	RES SMD 1/16W 10K J (0402)	AA	AA
	R514	30021960	RES SMD 1/16W 47R J (0402)	AA	AA
	R515	30021996	RES SMD 1/16W 10K J (0402)	AA	AA
	R516	30021960	RES SMD 1/16W 47R J (0402)	AA	AA
	R517	30021991	RES SMD 1/16W 100R J (0402)	AA	AA
	R518	30021991	RES SMD 1/16W 100R J (0402)	AA	AA
	R700	30021996	RES SMD 1/16W 10K J (0402)	AA	AA
	R701	30012712	RES SMD 1/16W 8.2K J (0603)	AA	AB
	R702	30012712	RES SMD 1/16W 8.2K J (0603)	AA	AB

	REF No.	PARTS	DESCRIPTION	SN CODE	EX CODE
	R703	30021996	RES SMD 1/16W 10K J (0402)	AA	AA
	R704	30022072	RES SMD 1/16W 27R J (0402)	AA	AA
	R705	30022056	RES SMD 1/16W 220R J (0402)	AA	AA
	R706	30012650	RES SMD 1/16W 15K J (0603)	AA	AB
	R707	30012650	RES SMD 1/16W 15K J (0603)	AA	AB
	R708	30012708	RES SMD 1/16W 68K J (0603)	AA	AA
	R709	30012708	RES SMD 1/16W 68K J (0603)	AA	AA
	R710	30022118	RES SMD 1/16W 75R J (0402)	AA	AA
	R711	30021996	RES SMD 1/16W 10K J (0402)	AA	AA
	R712	30022118	RES SMD 1/16W 75R J (0402)	AA	AA
	R713	30021996	RES SMD 1/16W 10K J (0402)	AA	AA
	R714	30021996	RES SMD 1/16W 10K J (0402)	AA	AA
	R715	30021981	RES SMD 1/16W 1.5K J (0402)	AA	AA
	R716	30012679	RES SMD 1/16W 3.9K J (0603)	AA	AB
	R717	30012679	RES SMD 1/16W 3.9K J (0603)	AA	AB
	R719	30021996	RES SMD 1/16W 10K J (0402)	AA	AA
	R720	30012703	RES SMD 1/16W 56K J (0603)	AA	AA
	R721	30012708	RES SMD 1/16W 68K J (0603)	AA	AA
	R722	30012703	RES SMD 1/16W 56K J (0603)	AA	AA
	R723	30012708	RES SMD 1/16W 68K J (0603)	AA	AA
	R724	30022085	RES SMD 1/16W 33R J (0402)	AA	AA
	R725	30012983	RES SMD 1/16W 15R J 0603	AA	AA
	R726	30022089	RES SMD 1/16W 680R J (0402)	AA	AA
	R727	30021975	RES SMD 1/16W 15R J (0402)	AA	AA
	R728	30012983	RES SMD 1/16W 15R J 0603	AA	AA
	R729	30021977	RES SMD 1/16W 1.2K J (0402)	AA	AA
	R730	30021977	RES SMD 1/16W 1.2K J (0402)	AA	AA
	R731	30022083	RES SMD 1/16W 330R J (0402)	AA	AA
	R732	30012657	RES SMD 1/16W 1K J (0603)	AA	AB
	R733	30022085	RES SMD 1/16W 33R J (0402)	AA	AA
	R734	30022089	RES SMD 1/16W 680R J (0402)	AA	AA
	R735	30021975	RES SMD 1/16W 15R J (0402)	AA	AA
	R736	30021977	RES SMD 1/16W 1.2K J (0402)	AA	AA
	R737	30021977	RES SMD 1/16W 1.2K J (0402)	AA	AA
	R738	30022083	RES SMD 1/16W 330R J (0402)	AA	AA
	R739	30021977	RES SMD 1/16W 1.2K J (0402)	AA	AA
	R740	30022085	RES SMD 1/16W 33R J (0402)	AA	AA
	R741	30022085	RES SMD 1/16W 33R J (0402)	AA	AA
	R742	30022085	RES SMD 1/16W 33R J (0402)	AA	AA
	R744	30012657	RES SMD 1/16W 1K J (0603)	AA	AB
	R746	30022085	RES SMD 1/16W 33R J (0402)	AA	AA
	R747	30022089	RES SMD 1/16W 680R J (0402)	AA	AA
	R748	30021975	RES SMD 1/16W 15R J (0402)	AA	AA
	R749	30012657	RES SMD 1/16W 1K J (0603)	AA	AB
	R750	30021977	RES SMD 1/16W 1.2K J (0402)	AA	AA
	R751	30021977	RES SMD 1/16W 1.2K J (0402)	AA	AA
	R752	30022083	RES SMD 1/16W 330R J (0402)	AA	AA
	R753	30012669	RES SMD 1/16W 22K J (0603)	AA	AB
	R754	30012669	RES SMD 1/16W 22K J (0603)	AA	AB
	R755	30022085	RES SMD 1/16W 33R J (0402)	AA	AA
	R756	30012662	RES SMD 1/16W 2.7K J (0603)	AA	AB
	R757	30012657	RES SMD 1/16W 1K J (0603)	AA	AB
	R758	30012662	RES SMD 1/16W 2.7K J (0603)	AA	AB
	R761	30022481	RES SMD 1/16W 240R F (0402)	AA	AA
	R762	30021996	RES SMD 1/16W 10K J (0402)	AA	AA
	R763	30021996	RES SMD 1/16W 10K J (0402)	AA	AA
	R764	30022085	RES SMD 1/16W 33R J (0402)	AA	AA
	R771	30012641	RES SMD 1/16W 10K J (0603)	AA	AB
	R772	30021987	RES SMD 1/16W 4.7K J (0402)	AA	AA
	R773	30021996	RES SMD 1/16W 10K J (0402)	AA	AA
	R775	30021977	RES SMD 1/16W 1.2K J (0402)	AA	AA
	R779	30012692	RES SMD 1/16W 4.7K J (0603)	AA	AB
	R780	30012641	RES SMD 1/16W 10K J (0603)	AA	AB
	R781	30012696	RES SMD 1/16W 47K J (0603)	AA	AB
	R782	30022085	RES SMD 1/16W 33R J (0402)	AA	AA
	R783	30022085	RES SMD 1/16W 33R J (0402)	AA	AA

	REF No.	PARTS	DESCRIPTION	SN CODE	EX CODE
	R784	30012641	RES SMD 1/16W 10K J (0603)	AA	AB
	R785	30012641	RES SMD 1/16W 10K J (0603)	AA	AB
	R786	30012662	RES SMD 1/16W 2.7K J (0603)	AA	AB
	R787	30022085	RES SMD 1/16W 33R J (0402)	AA	AA
	R788	30012692	RES SMD 1/16W 4.7K J (0603)	AA	AB
	R789	30012662	RES SMD 1/16W 2.7K J (0603)	AA	AB
	R791	30012509	RES SMD 1/16W 100K J (0603)	AA	AB
	R792	30022085	RES SMD 1/16W 33R J (0402)	AA	AA
	R793	30021987	RES SMD 1/16W 4.7K J (0402)	AA	AA
	R794	30021996	RES SMD 1/16W 10K J (0402)	AA	AA
	R795	30021987	RES SMD 1/16W 4.7K J (0402)	AA	AA
	R796	30012641	RES SMD 1/16W 10K J (0603)	AA	AB
	R797	30022113	RES SMD 1/16W 68R J (0402)	AA	AA
	R798	30012641	RES SMD 1/16W 10K J (0603)	AA	AB
	R799	30012641	RES SMD 1/16W 10K J (0603)	AA	AB
	R800	30022085	RES SMD 1/16W 33R J (0402)	AA	AA
	R802	30000718	RES CF 1/4W 4.7K J	AA	AB
	R803	30000593	RES SMD 1/10W 2.2K J (0805)	AA	AB
	R803	30021987	RES SMD 1/16W 4.7K J (0402)	AA	AA
	R804	30000481	RES CF 1/4W 1M J	AA	AB
	R805	30000983	RES MF 1/4W 4.7K F	AA	AB
	R805	30012692	RES SMD 1/16W 4.7K J (0603)	AA	AB
	R806	30000452	RES CF 1/4W 10R J	AA	AB
	R806	30012641	RES SMD 1/16W 10K J (0603)	AA	AB
	R807	30012692	RES SMD 1/16W 4.7K J (0603)	AA	AB
	R807	30021996	RES SMD 1/16W 10K J (0402)	AA	AA
	R808	30012641	RES SMD 1/16W 10K J (0603)	AA	AB
	R809	30021996	RES SMD 1/16W 10K J (0402)	AA	AA
	R810	30001159	RES MO 1W 0.33R J	AA	AB
	R810	30021996	RES SMD 1/16W 10K J (0402)	AA	AA
⚠	R812	30001257	RES MG SAFE 1/2W 4.7M J	AA	AD
	R812	30012641	RES SMD 1/16W 10K J (0603)	AA	AB
	R813	30000710	RES SMD 1/10W 47R J (0805)	AA	AB
	R813	30012657	RES SMD 1/16W 1K J (0603)	AA	AB
	R814	30013199	RES SMD 1/10W 2.4K F 0805	AA	AA
	R814	30021996	RES SMD 1/16W 10K J (0402)	AA	AA
	R815	30012510	RES SMD 1/16W 100R J (0603)	AA	AB
	R815	30012641	RES SMD 1/16W 10K J (0603)	AA	AB
	R816	30022067	RES SMD 1/16W 6.2K J (0402)	AA	AA
	R818	30025723	RES SMD 1/10W 68K F (0805)	AA	AA
	R819	30012641	RES SMD 1/16W 10K J (0603)	AA	AB
	R819	30012657	RES SMD 1/16W 1K J (0603)	AA	AB
	R820	30000590	RES CF 1/4W 2.2K J	AA	AB
	R820	30021991	RES SMD 1/16W 100R J (0402)	AA	AA
	R821	30000590	RES CF 1/4W 2.2K J	AA	AB
	R821	30021991	RES SMD 1/16W 100R J (0402)	AA	AA
	R822	30012641	RES SMD 1/16W 10K J (0603)	AA	AB
	R823	30000718	RES CF 1/4W 4.7K J	AA	AB
	R823	30022061	RES SMD 1/16W 27K J (0402)	AA	AA
	R824	30000718	RES CF 1/4W 4.7K J	AA	AB
	R825	30012641	RES SMD 1/16W 10K J (0603)	AA	AB
	R825	30022042	RES SMD 1/16W 1K J (0402)	AA	AA
	R826	30021996	RES SMD 1/16W 10K J (0402)	AA	AA
	R827	30000588	RES SMD 1/10W 220R J 0805	AA	AB
	R827	30012657	RES SMD 1/16W 1K J (0603)	AA	AB
	R828	30001174	RES MO 2W 0.47R J	AA	AB
	R829	30000477	RES CF 1/4W 100K J	AA	AB
	R829	30022040	RES SMD 1/16W 18K J (0402)	AA	AA
	R830	30000475	RES SMD 1/10W 10K J 0805	AA	AB
	R831	30007026	RES SMD 1/10W 5.1K J(0805)	AA	AA
	R831	30022078	RES SMD 1/16W 3.9K J (0402)	AA	AA
	R832	30000466	RES CF 1/4W 1K J	AA	AB
	R832	30021958	RES SMD 1/16W 47K J (0402)	AA	AA
	R833	30001174	RES MO 2W 0.47R J	AA	AB
	R834	30000469	RES SMD 1/10W 1K J 0805	AA	AB
	R834	30022078	RES SMD 1/16W 3.9K J (0402)	AA	AA

	REF No.	PARTS	DESCRIPTION	SN CODE	EX CODE
	R835	30000475	RES SMD 1/10W 10K J 0805	AA	AB
	R835	30022042	RES SMD 1/16W 1K J (0402)	AA	AA
	R836	30000664	RES SMD 1/10W 3.3K J (0805)	AA	AB
	R836	30022042	RES SMD 1/16W 1K J (0402)	AA	AA
	R837	30000503	RES SMD 1/10W 12K J (0805)	AA	AB
	R837	30022040	RES SMD 1/16W 18K J (0402)	AA	AA
	R838	30000517	RES SMD 1/10W 15R J 0805	AA	AB
	R838	30022057	RES SMD 1/16W 22K J (0402)	AA	AA
	R839	30012641	RES SMD 1/16W 10K J (0603)	AA	AB
	R840	30012641	RES SMD 1/16W 10K J (0603)	AA	AB
	R841	30012657	RES SMD 1/16W 1K J (0603)	AA	AB
	R841	30021996	RES SMD 1/16W 10K J (0402)	AA	AA
	R842	30012641	RES SMD 1/16W 10K J (0603)	AA	AB
	R843	30000466	RES CF 1/4W 1K J	AA	AB
	R844	30021996	RES SMD 1/16W 10K J (0402)	AA	AA
	R845	30012695	RES SMD 1/16W 470R J (0603)	AA	AB
	R845	30022030	RES SMD 1/16W 15K J (0402)	AA	AA
	R846	30022030	RES SMD 1/16W 15K J (0402)	AA	AA
	R847	30012659	RES SMD 1/16W 2.2K J (0603)	AA	AB
	R848	30012659	RES SMD 1/16W 2.2K J (0603)	AA	AB
	R848	30022078	RES SMD 1/16W 3.9K J (0402)	AA	AA
	R849	30012641	RES SMD 1/16W 10K J (0603)	AA	AB
	R849	30022057	RES SMD 1/16W 22K J (0402)	AA	AA
	R850	30000469	RES SMD 1/10W 1K J 0805	AA	AB
	R851	30012659	RES SMD 1/16W 2.2K J (0603)	AA	AB
	R852	30012659	RES SMD 1/16W 2.2K J (0603)	AA	AB
	R852	30021996	RES SMD 1/16W 10K J (0402)	AA	AA
	R853	30012641	RES SMD 1/16W 10K J (0603)	AA	AB
	R854	30012657	RES SMD 1/16W 1K J (0603)	AA	AB
	R855	30000925	RES MF 1/4W 2.2K F	AA	AB
	R856	30000918	RES MF 1/4W 2.1K F	AA	AB
	R858	30021999	RES SMD 1/16W 10R J (0402)	AA	AA
	R860	30000718	RES CF 1/4W 4.7K J	AA	AB
	R861	30012641	RES SMD 1/16W 10K J (0603)	AA	AB
	R862	30012641	RES SMD 1/16W 10K J (0603)	AA	AB
	R863	30012657	RES SMD 1/16W 1K J (0603)	AA	AB
	R864	30012695	RES SMD 1/16W 470R J (0603)	AA	AB
	R866	30000660	RES CF 1/4W 3.3K J	AA	AB
	R866	30021996	RES SMD 1/16W 10K J (0402)	AA	AA
	R867	30012689	RES SMD 1/16W 39K J (0603)	AA	AB
	R867	30021996	RES SMD 1/16W 10K J (0402)	AA	AA
	R868	30025723	RES SMD 1/10W 68K F (0805)	AA	AA
	R868	30021991	RES SMD 1/16W 100R J (0402)	AA	AA
	R869	30000475	RES SMD 1/10W 10K J 0805	AA	AB
	R869	30022056	RES SMD 1/16W 220R J (0402)	AA	AA
⚠	R870	30018085	CAP VAR SAFE 510V K MFCN14D511	AA	AD
	R870	30022078	RES SMD 1/16W 3.9K J (0402)	AA	AA
⚠	R871	30018085	CAP VAR SAFE 510V K MFCN14D511	AA	AD
	R871	30021958	RES SMD 1/16W 47K J (0402)	AA	AA
	R872	30022042	RES SMD 1/16W 1K J (0402)	AA	AA
	R873	30022094	RES SMD 1/16W 680K J (0402)	AA	AA
	R874	30022000	RES SMD 1/16W 470K J (0402)	AA	AA
	R875	30022057	RES SMD 1/16W 22K J (0402)	AA	AA
	R876	30022042	RES SMD 1/16W 1K J (0402)	AA	AA
	R878	30022038	RES SMD 1/16W 180R J (0402)	AA	AA
	R879	30022038	RES SMD 1/16W 180R J (0402)	AA	AA
	R882	30022038	RES SMD 1/16W 180R J (0402)	AA	AA
	R883	30022057	RES SMD 1/16W 22K J (0402)	AA	AA
	R884	30021958	RES SMD 1/16W 47K J (0402)	AA	AA
	R885	30022028	RES SMD 1/16W 150R J (0402)	AA	AA
	R886	30022028	RES SMD 1/16W 150R J (0402)	AA	AA
	R887	30022028	RES SMD 1/16W 150R J (0402)	AA	AA
	R898	30022085	RES SMD 1/16W 33R J (0402)	AA	AA
	R900	30000788	RES CF 1/4W 6.8M J	AA	AB
	R901	30000459	RES CF 1/4W 100R J	AA	AB
	R902	30000459	RES CF 1/4W 100R J	AA	AB

	REF No.	PARTS	DESCRIPTION	SN CODE	EX CODE
	R903	30000459	RES CF 1/4W 100R J	AA	AB
	R904	30000535	RES CF 1/2W 150K J	AA	AB
	R905	30000477	RES CF 1/4W 100K J	AA	AB
	R906	30000477	RES CF 1/4W 100K J	AA	AB
	R907	30020603	RES CC 1W 1K K	AA	AD
	R908	30020603	RES CC 1W 1K K	AA	AD
	R909	30000477	RES CF 1/4W 100K J	AA	AB
	R910	30020603	RES CC 1W 1K K	AA	AD
	R911	30000466	RES CF 1/4W 1K J	AA	AB
	R912	30000459	RES CF 1/4W 100R J	AA	AB
	R913	30000492	RES CF 1/4W 120R J	AA	AB
	R916	30000531	RES CF 1/4W 15K J	AA	AB
	R917	30000526	RES CF 1/4W 1.5K J	AA	AB
	R918	30000594	RES CF 1/4W 22K J	AA	AB
	R919	30000580	RES CF 1/4W 22R J	AA	AB
	R920	30000459	RES CF 1/4W 100R J	AA	AB
	R921	30000459	RES CF 1/4W 100R J	AA	AB
	R923	30000452	RES CF 1/4W 10R J	AA	AB
	R924	30000466	RES CF 1/4W 1K J	AA	AB
	R925	30000466	RES CF 1/4W 1K J	AA	AB
	R926	30000752	RES CF 1/4W 56K J	AA	AB
	R927	30000752	RES CF 1/4W 56K J	AA	AB
	R928	30000770	RES CF 1/4W 680R J	AA	AB
	R929	30000452	RES CF 1/4W 10R J	AA	AB
	R931	30001194	RES MO 2W 680R J	AA	AC
⚠	R932	30001245	RES FUSE SAFE 1/4W 0.47R J	AA	AC
	R933	30021483	RES CC 1W 2.2K K	AA	AD
	R938	30001100	RES MO 1W 150R J	AA	AB
	R940	30000580	RES CF 1/4W 22R J	AA	AB
	R941	30000580	RES CF 1/4W 22R J	AA	AB
	R942	30000580	RES CF 1/4W 22R J	AA	AB
	R943	30006562	RES MO 1/2W 150R J	AA	AB
⚠	R944	30001244	RES FUSE SAFE 1/2W 0.47R J	AA	AB
	R945	30000488	RES CF 1/4W 1R J	AA	AA
	R946	30000650	RES CF 1/4W 33R J	AA	AB
	R947	30000531	RES CF 1/4W 15K J	AA	AB
	R948	30000612	RES CF 1/4W 2.4K J	AA	AB
	R949	30000706	RES CF 1/4W 47R J	AA	AB
	R950	30000607	RES CF 1/4W 2.2R J	AA	AB
	R951	30000607	RES CF 1/4W 2.2R J	AA	AB
	R951	30012659	RES SMD 1/16W 2.2K J (0603)	AA	AB
	R952	30000628	RES CF 1/4W 2.7K J	AA	AB
	R952	30000459	RES CF 1/4W 100R J	AA	AB
	R953	30000702	RES CF 1/4W 430R J	AA	AA
	R954	30000459	RES CF 1/4W 100R J	AA	AB
	R965	30000775	RES CF 1/4W 6.8K J	AA	AB
	R966	30012644	RES SMD 1/16W 12K J (0603)	AA	AB
	R993	30000712	RES CF 1/4W 470R J	AA	AB
			PRINTED WIRING BOARD MODULES		
	.	20170689	MD.ASY.FB53-4511125211112121111 (Dig. Mod. Unit)	BP	CE
	.	20170687	CHS.ASSY.53-5131411216212112214U (Mother Unit)	BU	CP
	.	20163353	MD.ASY.SB112-FAV+HP+SVHS 2862/3262 (AK53) (Front Unit)	AT	BD
	.	20168819	CRT B.ASSY.TP53-SIN.FOC.W/BSVM(AK53)SHARP (CRT Unit)	AS	BC
			MISCELLANEOUS PARTS		
	.	30018087	CNAS 2P/350 TRFPFC DIS W/C	AA	AE
	.	35000217	SCREW S C SYF YFMB 3.5*9.5	AA	AB
⚠	.	20140491	BACK CVR.3262W EKO2GRAY (I)	AK	AW
	.	20141152	SNOW BOX ASSY 3262W RF	AL	AX
	.	20140497	SNOW BOX TOP 3262W	AG	AS
	.	20140498	SNOW BOX BOTTOM 3262W	AG	AS
	.	20108124	BACK DOOR AK45/52 (I)	AC	AH
	.	35000217	SCREW S C SYF YFMB 3.5*9.5	AA	AB
	.	35005084	SCREW C ZN RYAKB 6x30	AA	AB
	.	35005418	SCREW P C ZN YSB 3.5x10 (KN1031 T35X10)	AA	AA

	REF No.	PARTS	DESCRIPTION	SN CODE	EX CODE
	.	35008081	SCREW P C ZN YFMB 3*9.5	AA	AA
	.	35008191	SCREW P C ZN YSMB 3*12	AA	AA
	.	35009300	SCREW P C ZN FYSB 4X16 (D:11)	AA	AB
	.	35010702	SCREW P C ZN YSB 4x20 (BEYAZ)	AA	AA
	.	20151304	POWER CORD ASSY.(2.4MT W/FTZ)(LONGWELL)	AD	AM
⚠	.	30028208	POWER CORD SAFE EURO 2.2M SHARP W/FILTER	AG	AT
⚠	.	20153254	FRONT 3262W W/H SLV285S(P)(PW/S)	AS	BD
	.	20153255	CONTROL PANEL DOOR 3262W (SLV285S(P)	AD	AL
	.	20153256	SPEAKER GRILL 3262W SLV285S(P)	AH	AT
	.	20153349	BUTTON ASSY 2862W/3262WRF (SLV285S(P)	AC	AK
	.	20153352	BUTTON ON/OFF XX62W SLV285S(P) SHARP	AB	AF
	.	35008861	SPRING ON/OFF SWITCH 1462 SHARP(SHARP)	AA	AA
	.	35000136	FUSE HOLDER TK79-A (GRAY)	AA	AD
	.	20166413	LBL.BCK.CVR.SHARP 32LF94EC (AK53)	AA	AC
	.	20147245	LBL.BCK.CVR.ASSY (TV) (WO/UL)SHARP	AA	AC
	.	50043775	LABEL LOT W/BARCODE (39X89)	AA	AB
	.	20143026	R/C 1548 SHARP (EKO2GRAY/I) (GRAY/S)	AM	AY
	.	50052692	I/B SHARP 32LF94EC P/AK53/1548/EPMÇSRR	AG	AT
	.	20166417	LBL.CART.BOX SHARP 32LF94EC (AK53)	AA	AD
	.	50043776	LABEL LOT W/BARCODE (100X280) SHARP	AA	AC
	.	30013903	CNAS 2P/900 DIS W/C+FER UL2547 AWG24	AB	AG
	.	30027382	SPEAKER 7R 12W F/R 60x120MM-28&32" SHARP	AE	AP
	.	35008089	SCREW P C ZN YSMB 4*10	AA	AA
	.	40016856	RUBBER BUSHING SHARP	AA	AB
	.	40016876	SPEAKER BRACKET 3262W	AB	AF
	.	40016879	SPEAKER SPACER 3262W	AB	AF
	.	30013905	CNAS 2P/900 DIS W/BLKC+FER UL2547 AWG24	AB	AG
	.	30018087	CNAS 2P/350 TRFPFC DIS W/C	AA	AE
	.	30018270	TRF PFC SAFE 1,7A 43MH 170W	AM	AX
	.	35000217	SCREW S C SYF YFMB 3.5*9.5	AA	AB
⚠	.	20140466	BRACKET CHS XX62-64W (I) V.0	AD	AM
	.	35005061	SCREW RB C SK ZN YFMB 2.9*9.5	AA	AA
	.	30021752	IC M24C64 (SO8W6)	AD	AK
	.	30020493	CNAS 2P/600 SIS W/DC+FER UL1007AWG24	AB	AF
	.	20085269	CABLE HOLDER CRT (I) UL94V-0	AA	AC
	.	60000009	FR-HIPS NATR.V-0 SAFE	AK	AV
	.	20140495	BRACKET BF 3262W (I) V.0	AA	AD
	.	35008849	DOOR METAL SPRING (30mmX20mmX0.5mm)	AA	AC
	.	35008850	METAL WASHER XX6XW (SHARP)	AA	AB
	.	40006731	ISOLATION COTTON (9x25000mm)	AA	AC
	.	40016871	DOOR SPACER (M10)	AA	AB
	.	40016873	WASHER 2862W	AA	AB
	.	70000331	ADHESIVE TAPE 75MM/660M (4125)	AA	AB
	.	30029836	CNAS 2P-3/150SVM+F SIS W/DC UL1007 AWG28	AB	AE
	.	40016814	LOGO SHARP (D.C.-SILVER)28-32"	AD	AK
	.	20060150	BRACKET LED 20 (D100)	AA	AD
	.	30009784	SOCKET IC 8P (DIP) (IC309)	AA	AB
	.	35009882	HEATSINK 11AK53 AUDIO (IC401)	AA	AC
	.	35009882	HEATSINK 11AK53 AUDIO (IC402)	AA	AC
	.	20137017	HE.ASY.52-CRT BOARD TDA6108 (AK52) (IC900)	AH	AV
⚠	F100	30001731	FUSE SAFE 2.5A 250V 5*20MM	AA	AC
	J130	30006712	FERRITE BEAD 3.5X4.7X0.8	AA	AB
	JK100	30026584	TV JACK BOARD JXTI046	AG	AS
	JK101	30001902	JACK HEADPHONE STEREO WO/SW	AC	AH
	PL100	30020822	CNAS 6P/450 FLT W/C+FER UL2468AWG24	AC	AG
	PL101	30001838	CONN HEADER 3P 2.5MM TOP YELLOW SD	AA	AC
	PL101	30006709	CONN HEADER 5P 2.5MM TOP WHT SD	AA	AB
	PL101	30017799	CNAS 5P/500 TUB SIS W/DC UL1007AWG24	AC	AH
	PL101	30020137	CNAS 600 FAV SVHS W/DC+FER	AF	AQ
	PL102	30020137	CNAS 600 FAV SVHS W/DC+FER	AF	AQ
	PL103	30020137	CNAS 600 FAV SVHS W/DC+FER	AF	AQ
	PL102	30001830	CONN HEADER 2P 2.5MM TOP BLUE SD	AA	AB
	PL103	30001839	CONN HEADER 3P 2.5MM TOP GREEN SD	AA	AC
	PL103	30001792	CONN HEADER 2P 7.5MM TOP WHT	AA	AC
	PL104	30008726	CNAS 3P/550 FLT W/BLK C UL2468AWG24	AB	AF
	PL105	30001829	CONN HEADER 2P 2.5MM TOP WHT SD	AA	AB

	REF No.	PARTS	DESCRIPTION	SN CODE	EX CODE
	PL107	30001792	CONN HEADER 2P 7.5MM TOP WHT	AA	AC
	PL107	30014711	CNAS 2P/250 W/DC	AB	AF
	PL107	30001829	CONN HEADER 2P 2.5MM TOP WHT SD	AA	AB
	PL108	30001792	CONN HEADER 2P 7.5MM TOP WHT	AA	AC
	PL108	35000135	TEST PIN 1.1MM	AA	AB
	PL203	30010921	DOUBLE-DECK SCART SOCKET	AD	AM
	PL401	30018410	CONN HEADER 35P 3.0MM SIDE DR	AA	AB
	PL402	30018410	CONN HEADER 35P 3.0MM SIDE DR	AA	AB
	PL404	30001844	CONN HEADER 3P 2.5MM SIDE GREEN SD	AA	AC
	PL405	30001762	CONN HEADER 2P 2.5MM(9.7MM) TOP	AA	AC
	PL405	30001833	CONN HEADER 2P 2.5MM SIDE BLUE SD	AA	AC
	PL406	30001764	CONN HEADER 2P 2.5MM(9.7MM) TOP BLACK	AA	AC
	PL418	30009846	CABL 1P/40 SIS	AA	AB
	PL419	30009846	CABL 1P/40 SIS	AA	AB
	PL420	30009846	CABL 1P/40 SIS	AA	AB
	PL421	30009846	CABL 1P/40 SIS	AA	AB
	PL422	30026034	CNAS 1P/460-330 DIS W/RED DC UL1672AWG24	AA	AE
	PL423	30018412	CONN HOUSING 35P 3.0MM TOP DR	AA	AB
	PL424	30018412	CONN HOUSING 35P 3.0MM TOP DR	AA	AB
	PL700	30001770	CONN HEADER 3P 2.5MM TOP BD	AA	AC
	PL701	30001784	CONN HEADER 6P 2.5MM TOP BD	AA	AC
	PL702	30001831	CONN HEADER 2P 2.5MM TOP RED SD	AA	AB
	PL703	30001841	CONN HEADER 3P 2.5MM SIDE BLACK SD	AA	AB
	PL704	30012894	CONN HEADER 10P 2.54MM TOP WHT	AA	AB
	PL707	30021923	CONN MALE 20P TOP 1.257 DUAL HEADER	AG	AT
	PL801	30001795	CONN HEADER 3P 5/7.5MM TOP WHT	AA	AC
	PL802	30001792	CONN HEADER 2P 7.5MM TOP WHT	AA	AC
	PL804	30001792	CONN HEADER 2P 7.5MM TOP WHT	AA	AC
	PL853	30029835	CNAS 10P/400 AK53 SHL W/DC+F UL1533AWG24	AF	AR
	PL902	35000176	EYELET BR 2*3MM	AA	AB
	PL902	35000135	TEST PIN 1.1MM	AA	AB
	PL903	35000176	EYELET BR 2*3MM	AA	AB
	PL904	30006709	CONN HEADER 5P 2.5MM TOP WHT SD	AA	AB
	PL905	30012894	CONN HEADER 10P 2.54MM TOP WHT	AA	AB
	PL908	35000176	EYELET BR 2*3MM	AA	AB
	PL908	35000135	TEST PIN 1.1MM	AA	AB
⚠	PL910	30028447	SOCKET CRT SAFE NARROWNECK W/GND INCHANG	AA	AE
	PL911	30018976	CONN HEADER 3P 2.5MM TOP BSVM	AA	AB
⚠	RL801	30002183	RELAY SAFE MON15 KI-S-212M	AG	AS
	S408	30012982	RES SMD 1/16W 10R J 0603	AA	AB
	S409	30012982	RES SMD 1/16W 10R J 0603	AA	AB
	S802	30012657	RES SMD 1/16W 1K J (0603)	AA	AB
	SG901	30000428	SPARK GAP 300V	AB	AG
	SG902	30000428	SPARK GAP 300V	AB	AG
	SG903	30000428	SPARK GAP 300V	AB	AG
	SG904	30000428	SPARK GAP 300V	AB	AG
	SG905	30021532	SPARK GAP 1500V	AC	AG
	SW100	30002181	SWITCH TACT(4)	AA	AC
	SW101	30002181	SWITCH TACT(4)	AA	AC
	SW102	30002181	SWITCH TACT(4)	AA	AC
	SW103	30002181	SWITCH TACT(4)	AA	AC
⚠	SW104	30017848	SWITCH SAFE ON/OFF 4A/128A JVC(PANASONI)	AC	AH
⚠	TH801	30001270	PTC SAFE 9 OHM	AC	AK

HOW TO UPDATE THE TECHNICAL INFORMATION APPEARED ON THIS SERVICE MANUAL

1. Web site: https://www.vestelservice.com
2. Select: Technical Support
3. Login: 101278
4. Password: SHPII278

By this access you can consult the latest schematic diagram or request the Parts Listing of a concrete Production Date / Serial Number.

By this way it can be also consulted the issued Technical Reports (Service Bulletins).

SHARP®

No part of this publication may be reproduced, stored in a retrieval system, or transmitted in any form or by any means, electronic, mechanical, photocopying, recording, or otherwise, without prior written permission of the publisher.

Technical information and Production:

Vestel Electronik AS

PRINTED BY: ON:

Think Ecology, please use

Technical information re-issued:

SHARP ELECTRONICA ESPAÑA S.A.
Service Manual Group
Engineering Dept.
Polígono Industrial Can Sant Joan
08190 Sant Cugat del Vallès
Barcelona
Spain

RECYCLED PAPER

AK53 (D.O.C)

SERVICE MANUAL

RELEASE DATE: **22.03.2004**

PREPARED BY: **VESTEL ELECTRONICS**

Overall Block Diagram

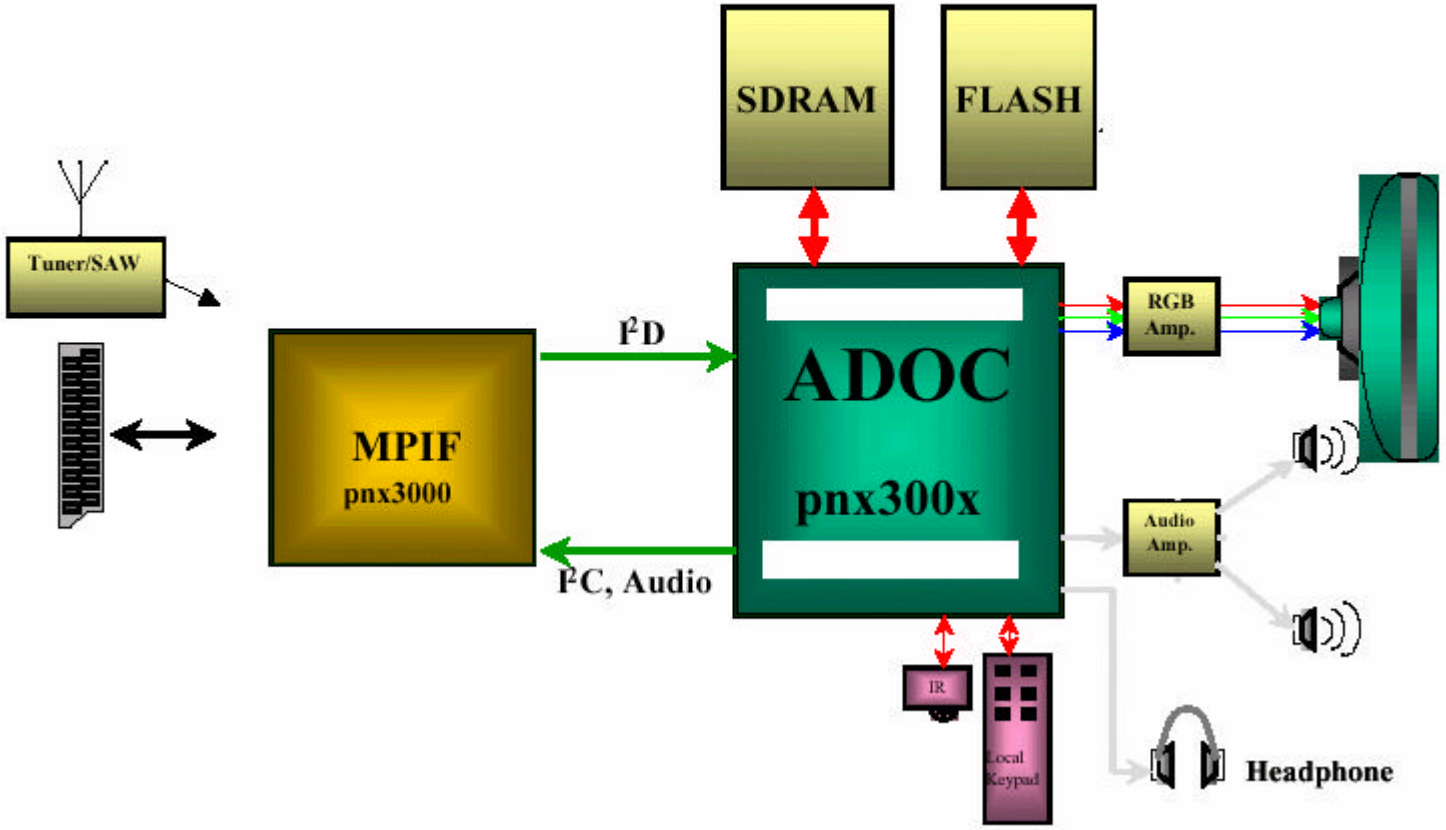

TABLE OF CONTENTS

1.INTRODUCTION 1
2.TUNER SPECIFICATION 1
3.IF/AUDIO&VIDEO SWITCHING/AD CONVERTER PART 2
(PNX3000 (CALLED AS MPIF)) 2
4.DIGITAL TV PROCESSOR (PNX300X (CALLED AS ADOC)) 3
5.SOUND OUTPUT STAGE WITH TDA7480L 4
6.VERTICAL OUTPUT STAGE WITH STV9379FA& TDA8177F 4
7.VIDEO OUTPUT AMPLIFIER TDA6108JF 4
8.POWER SUPPLY PART 4
9.SERIAL ACCESS 64K EEPROM 5
10.HEADPHONE AMPLIFIER STAGE 5
11.SAW FILTER SPECIFICATION 6
12.IC DESCRIPTIONS 6
12.1.TDA6108JF (IC900) **7**
12.1.1.General Description 7
12.1.2.Features 7
12.1.3.Pinning 7
12.2.HT48RA0A **8**
12.2.1.General Description 8
12.2.2.Features 8
12.2.3.Pin Descriptions 8
12.3.PNX3000 (IC400) **9**
12.3.1.General Description 9
12.3.2.Features 9
12.4.CS51033 (IC 104) **13**
12.4.1.General Description 13
12.4.2.Features 13
12.4.3.Pin Description 13
12.5.SDRAM 64MBIT (IC315) **14**
12.5.1.General Description 14
12.5.2.Features 14
12.5.3.Pin Description 14
12.6.FLASH (IC 314) **15**
12.6.1.General Description 15
12.6.2.Features 15
12.6.3.Pin/Ball Descriptions 16
12.7.NE56610-29 (RESET IC) (IC 316) **18**
12.7.1.General Description 18
12.7.2.Features 18
12.7.3.Pin Description 18
12.8.STS5PF30L (IC105) **19**
12.8.1.Description 19
12.8.2.Features 19
12.9.PNX300X (IC313) **20**
12.9.1.General Description of the Digital One Chip System 20
12.9.2.Features of the ADOC Processor 21
12.10.M24C64WBN6 (IC309) **26**
12.10.1.Features 26
12.10.2.Description 26
12.11.TDA7480L (IC401,IC402) **27**
12.11.1.Description 27
12.11.2.Features 27
12.11.3.Pin Functions 27
12.12.LM7808 (IC803) **27**
12.12.1.Description 27
12.12.2.Features 27
12.13.TDA8177F & STV9379FA (IC100) **28**

12.13.1.Description 28
12.13.2.Features 28
12.13.3.Pin connections....28
12.13.4.Block Diagram 28
12.14.TCET1102G (IC801)....29
12.14.1.Description 29
12.14.2.Applications 29
12.14.3.Features 29
12.15.MC44608 (IC804)....30
12.15.1.Description 30
12.15.2.General Features 30
12.15.3.Pin Connections....30
12.16.TL431 (Q816) 32
12.16.1.Description 32
12.16.2.Features 32
12.16.3.Pin Configurations....32
12.17.TFMS5360....32
12.17.1.Description 32
12.17.2.Features 32
13.AK53 CHASSIS MANUAL ADJUSTMENTS PROCEDURE 33
13.1.PRELIMINARY....33
13.2.SYSTEM VOLTAGE ADJUSTMENTS....33
13.3.AFC ADJUSTMENTS 33
13.4.FOCUS ADJUSTMENTS....33
13.5.SCREEN ADJUSTMENT (VG2 ALIGNMENT) 33
13.6.AGC (AUTOMATIC GAIN CONTROL)....33
14.AK53 CHASSIS PRODUCTION SERVICE MODE ADJUSTMENTS 34
14.1.OPTIONS 34
14.2.GEOMETRY....36
14.2.1.EW ALIGNMENT....36
14.3.VIDEO ALIGNMENTS....44
14.3.1.VIDEO ADJUST....44
14.3.1.1.WHITE DRIVE....45
14.3.1.2.MIN BRIGHTNESS....45
14.3.1.3.MIN CONTRAST 45
14.3.2.COLOR ADJUSTMENT....46
14.3.2.1.Y DEL SEC BG, Y DEL SEC DK, Y DEL SEC L, Y DEL SEC AV:....46
14.3.2.2.Y DEL PAL BG, Y DEL PAL DK, Y DEL PAL I, Y DEL PAL M, Y DEL PAL AV: 46
14.3.2.3.VIDDEC QTHR, VIDDEC STHR 46
14.4.SOUND RELATED OPTIONS....47
14.5.FACTORY SETTINGS 48
15.MENU LANGUAGES 49
16.BLOCK DIAGRAM....50
17.CIRCUIT DIAGRAMS....51

1.INTRODUCTION

11AK53 is a 100Hz color television DIGITAL ONE CHIP SYSTEM (DOC) capable of driving 28”4:3/16:9 SF/RF, 29”4:3 real flat, 32” 16:9 SF/RF, 33”4:3 and 34‘ 4:3 real flat picture tubes.
The chassis is capable of operation in PAL, SECAM, NTSC (playback) color standards and multiple transmission standards as B/G, D/K, I/I’, and L/L´.
Sound system output is supplying 2x10W (10%THD) for left and right outputs of 8ohm speakers.
TV supports the level 1.5 teletext standard. It is possible to decode transmissions including high graphical data.
The chassis is equipped with two full EuroScarts, one SCART for AV input/output, one front-AV input, one back-AV input, one headphone output, one SVHS input (via SCART and SVHS connector), two external speaker outputs (left and right), one audio line output.

2.TUNER SPECIFICATION

The hardware and software of the TV is suitable for tuners, supplied by different companies, which are selected from the Service Menu. These tuners can be combined VHF, UHF tuners suitable for CCIR systems B/G, H, L, L´, I/I´, and D/K. The tuning is available through the digitally controlled I^2C bus (PLL). Below you will find info on one of the Tuners in use.

General description of UV1316 MK3(Philips) /CTF55XX (Thomson):
UV1316 MK3 (Philips) /CTF55XX (Thomson) tuners, which are designed to meet a wide range of applications are PLL tuners; It is a combined VHF, UHF tuner suitable for CCIR systems B/G, H, L, L’, I and I’. The low IF output impedance has been designed for direct drive of a wide variety of SAW filters with sufficient suppression of triple transient.

Features of Tuner:
1. Those tuners are small sized UHF/VHF tuners
2. Systems CCIR: B/G, H, L, L’, I and I’; OIRT: D/K
3. Digitally controlled (PLL) tuning via I^2C-bus
4. Off-air channels, S-cable channels and Hyperband
5. World standardized mechanical dimensions and world standard pinning
6. Compact size
7. Complies to “CENELEC EN55020” and “EN55013”

Pinning:

1.	Gain control voltage (AGC)	:	4.0V, Max: 4.5V
2.	Tuning voltage		
3.	I^2C-bus address select	:	Max: 5.5V
4.	I^2C-bus serial clock	:	Min:-0.3V, Max: 5.5V
5.	I^2C-bus serial data	:	Min:-0.3V, Max: 5.5V
6.	Not connected		
7.	PLL supply voltage	:	5.0V, Min: 4.75V, Max: 5.5V
8.	ADC input		
9.	Tuner supply voltage*	:	33V, Min: 30V, Max: 35V
10.	Symmetrical IF output 1		
11.	Symmetrical IF output 2		

*33V is obtained from FBT of large signal board.

3.IF/AUDIO&VIDEO SWITCHING/AD CONVERTER PART (PNX3000 (CALLED AS MPIF))

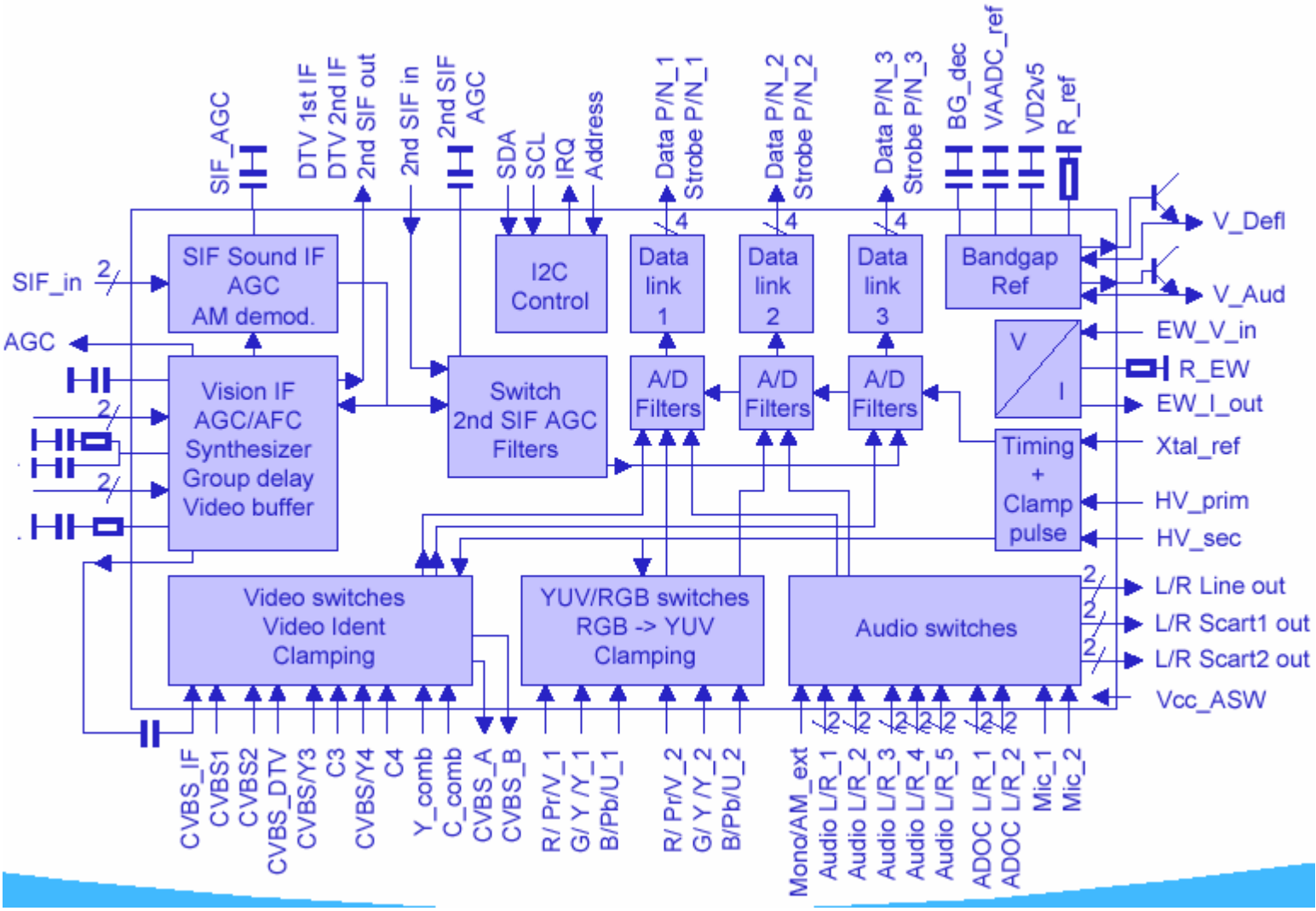

MPIF IC consists of following OVERALL blocks;
(1)-Video/Audio switching
(2)-IF processing
(3)-A/D conversion for digital TV (DTV) processor (ADOC-PNX300X)

Main building blocks:
_ Vision PLL-IF, auto-calibrated, selectable IF frequency, 4 selectable AGC time constants, built-in sound trap and selectable group delay. The demodulated CVBS signal is fed outside for use with SCART.
_ Synthesizer mode, meant for down mixing of DTV signals to a suitable 2nd IF which can be handled by a digital DTV decoder. Using a suitable SAW filter at the input the synthesizer mode can also be used to downmix FM radio frequencies from the Tuner to a suitable 2nd IF frequency for the FM demodulator.
_ Two Video IF inputs, selectable by internal switch to enable use of optimized SAW filters
_ Sound QSS IF, demodulated 2nd SIF can be either from SIF input (QSS) or Video IF (intercarrier). The Sound IF also contains an AM demodulator for SECAM L/L'
_ CVBS and Y/C crossbar switch, with 2 video outputs for further processing in the Digital TV Signal Processor after A/D conversion and 2 selectable video outputs which are available on output pins for external connections

_ Two YUV / RGB inputs, which can handle also YPrPb and sync on Y for DVD players Also 2Fh YUV / RGB signals can be handled by the A/D converters.
_ An audio stereo crossbar switch with two outputs (one stereo, one stereo or mono) for further processing in the processor after A/D conversion and three stereo outputs for external connections. Extra inputs are provided to enable also the selection of demodulated RF sound (mono, NICAM, 2CS) from the Digital TV Signal Processor for use on external connections.
_ Low pass filtering and A/D conversion. The audio and video sampling clocks use the same reference so it is possible to interleave video and audio data into one serial data stream.
_ For control, I 2 C control is built-in with a selectable address.
_ Auxiliary building blocks which perform some functions which have typical better performance in analogue design environment than in digital and are used by the Digital TV Signal Processor:
- Reference voltage for vertical deflection and audio ADC's
- Voltage to current conversion of the E/W
The set-up with an analogue and a digital part has the following advantages:
_ High frequent parts (IF) can be included in the concept
_ Less A/D and D/A converters needed for source switching
_ Better performance for AD converters (realized in analogue design environment, more accurate, less tolerance)
_ Critical items like reference voltages can be realized in the analogue environment

4.DIGITAL TV PROCESSOR (PNX300X (CALLED AS ADOC))

The DOC system serves the TV functionality for small signal processing of audio, video, VBI services, graphics and control. This chip implements all TV functions in digital technology. PNX300X is the digital TV processor which consists of;

? TV video processor
? TV deflection processor
? TV audio processor
? TV microcontroller

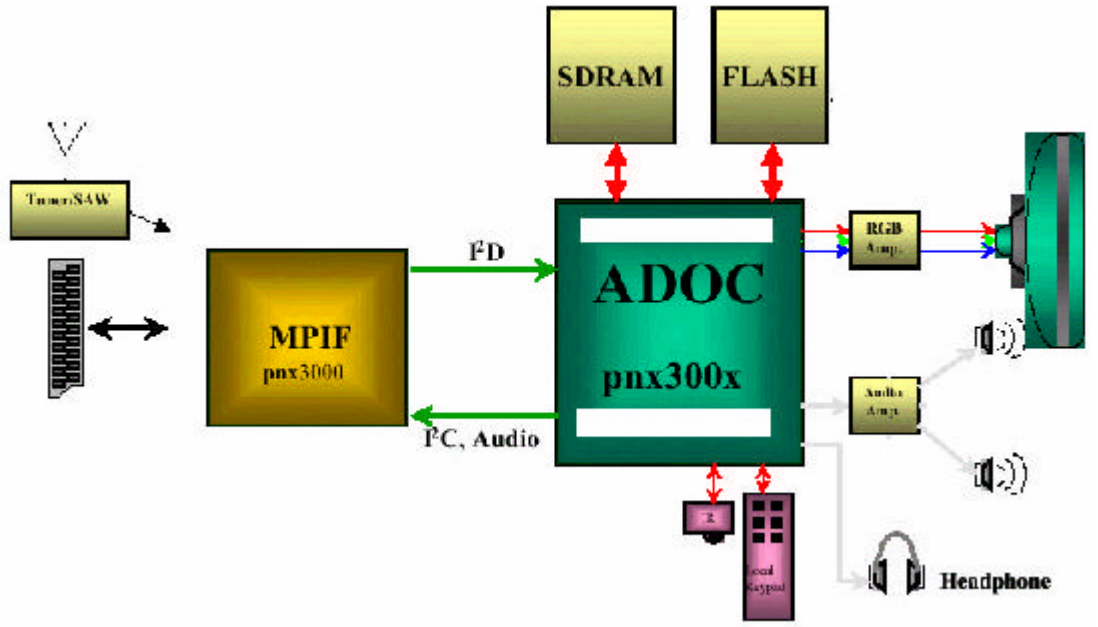

As it is shown in the below block diagram ADOC gets the digital signal which is converted by MPIF and processed in its own blocks and controls the overall system by I2C and the software programme is downloaded into a flash memory which tells microcontroller within ADOC about the software management and the output of ADOC turns into RGB, Main/Headphone audio right/left.
Then RGB output of ADOC is processed into a RGB preamplifier circuit to get enough gain for the video output amplifier TDA6108JF (in CRT board)

<u>Highlight points of ADOC:</u>
(1)-Digital (I2D) data link is connected from MPIF to ADOC with a swing of about 300mV. The data rate is 594Mbit/s.
(2)-Only one crystal is used in overall system which is 13.5MHZ.

Functional block diagram of ADOC:

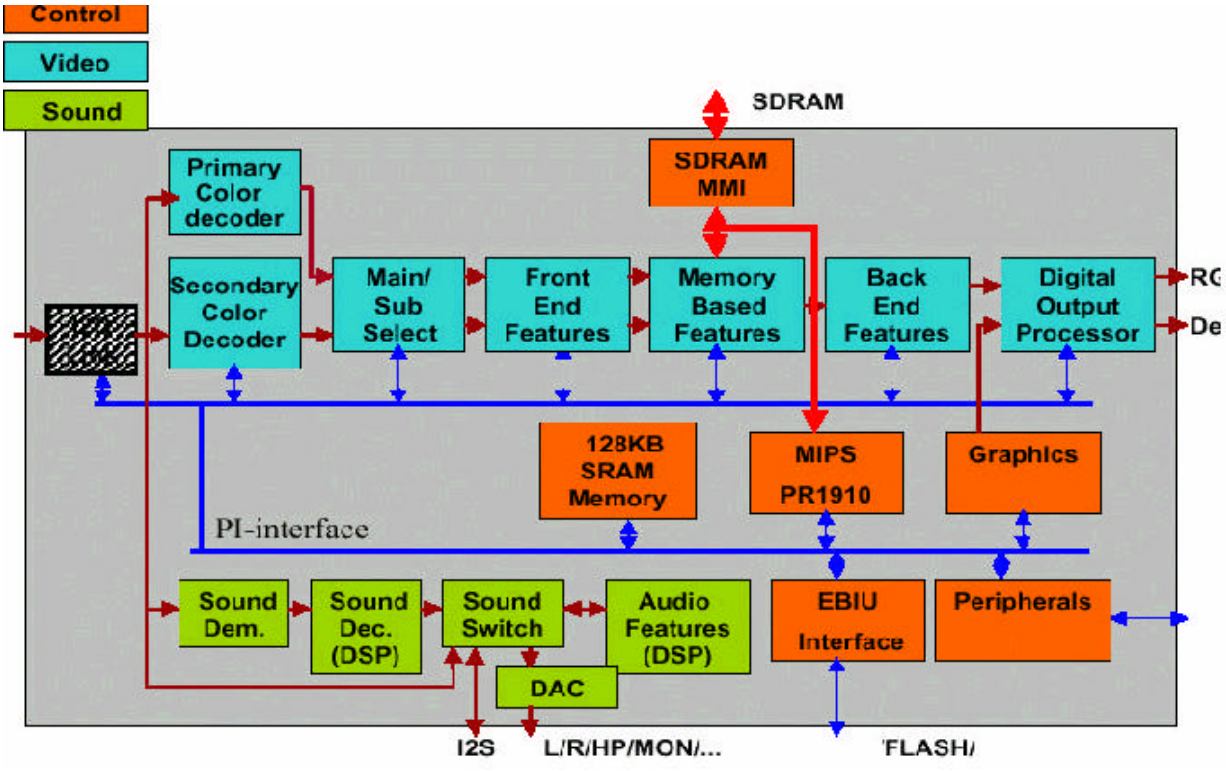

5.SOUND OUTPUT STAGE WITH TDA7480L

The TDA7480L is an audio class-D amplifier assembled in Power DIP package specially designed for high efficiency applications mainly for TV and Home Stereo sets.

Mute stand-by function of the audio amplifier can be described as the following; the pin 12 (MUTE/STAND-BY) controls the amplifier status by two different thresholds, referred to ground. When Vpin 12 voltage is lower than 0.7V the amplifier is in Stand-by mode and the final stage generators are off. When Vpin 12 is higher than 4V, the amplifier is in play mode.

The TDA7480L is a 10W+10W stereo sound amplifier with mute/stand-by facility. MUTE control signal coming from microcontroller (when it is at high level) activates the mute function. IC is muted when mute pin is at low level (pin12). MUTE pin can also be activated via an external pop-noise circuitry in order to eliminate pop noise when TV is turned off. Just after the TV is turned off, this circuit switches the IC to stand-by mode by pulling the mute pin voltage to ground.

6.VERTICAL OUTPUT STAGE WITH STV9379FA& TDA8177F

The IC STV9379FA& TDA8177F is the vertical deflection booster circuit. Two supply voltages, +14V and –14V are needed to scan the inputs VERT+ and VERT-, respectively. And a third supply voltage, +60V for the flyback limiting is needed. The vertical deflection coil is connected in series between the output and feedback to the input.

7.VIDEO OUTPUT AMPLIFIER TDA6108JF

The TDA6108JF includes three video output amplifiers is intended to drive the three cathodes of a color picture tube.

8.POWER SUPPLY PART

In Large Signal Board

The DC voltages required at various parts of the chassis are provided by an SMPS transformer controlled by the IC MC44608, which is designed for driving, controlling and protecting switching transistor of SMPS. The transformer generates 135V for FBT input, +/-14V for audio amplifier, 8V, 12V, V8Stby (needed for step down converted for small signal board) and 5V supplies for other different parts of the chassis.

An optocoupler is used to control the regulation of line voltage and stand-by power consumption. There is a regulation circuit in secondary side. This circuit produces a control voltage according to the changes in 135V DC voltage, via an optocoupler (TCET 1102G) to pin3 of the IC.
During the switch on period of the transistor, energy is stored in the transformer. During the switch off period energy is fed to the load via secondary winding. By varying switch-on time of the power transistor, it controls each portion of energy transferred to the second side such that the output voltage remains nearly independent of load variations.

In Small Signal Board
V8Stby and +5V is switched by a discrete circuit to make power consumption effective.
? When supply switch port of ADOC IC is HIGH +5V ✍ 3.3V via IC103 regulator
? When supply switch port of ADOC IC is LOW V8Stby ✍ 3.3V via IC103 regulator
V8Stby is used to get +5V, which is available in Stby.

Supply Voltages Available/Not-Available In Stand-by, IC Requirement, Supply Location

Supply	In Stby available?	Where?	For Which ?	NOTE
135V (B+)	NO	large signal board	FBT	depends on CRT
14V-A	NO	large signal board	IC401,IC402(Audio amplifier)	
(-)14V-A	NO	large signal board	IC401,IC402(Audio amplifier)	
14V	NO	large signal board	Horizontal drive transistor	
8V	NO	small signal board	IC400 (MPIF)/Headphone discrete circuit/RGB pre amplifiers/audio saw filter(Z401)	
5V	NO	small signal board	IC400 (MPIF),Tuner(TU200,TU850)	
V8stby	YES	large signal board	Step down IC and for s+5V	
1.8V	YES	small signal board	IC313 (ADOC)	
3.3V	YES	small signal board	IC313 (ADOC),IC309(EEPROM),IC316(Reset IC)	
12V	NO	small signal board	CRT board (IC900)	
5V	YES	small signal board	LED/IR	
Vert Sup+ (14V)	NO	large signal board	Vertical IC (IC100)	
Vert Sup- (-14V)	NO	large signal board	Vertical IC (IC100)	
33V	NO	large signal board	Tuner (TU200,TU850)	

Important Microcontroller Ports For Supplying

Port	State	Function
On/Off	low	normal operation
On/Off	high	stand by mode

9.SERIAL ACCESS 64K EEPROM
M24C64WBN6**,** is the 64Kbit electrically erasable programmable memory. The memory is compatible with the I^2C standard, two wire serial interface, which uses a bi-directional data bus and serial clock.

10.HEADPHONE AMPLIFIER STAGE
This stage is designed with discrete components (no IC is used for this purpose)

11.SAW FILTER SPECIFICATION

Two groups of saw filters are used from EPCOS

For picture (Z400)

? Pal Secam BG DK L L'✍K3953M

? Pal Secam BG I I' ✍K3953M

For sound(Z401)

? Pal Secam BG DK L L'✍K9656M

? Pal Secam BG I I' ✍K9356

For sound saw filter it needs to be switched between L' and other standards for K3953M, a port signal coming from PNX300X(ADOC) called SEL_L/L' is used for this purpose to make pin2 of audio saw filter ground or not.

port	state	Q404	Standard
SEL_L/L'	High	Shorted to ground	L'
SEL_L/L'	Low	open	BG,DK,I,L

Pin Configuration

Pin No	Definition
1	Input
2	Input - ground
3	Chip carrier - ground
4	Output
5	Output

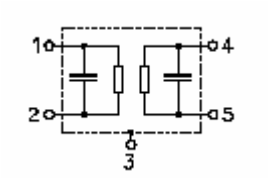

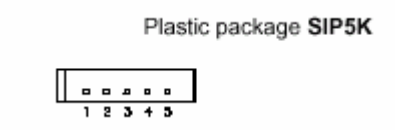

Maximum ratings for saw filters

Operable temperature range	T_A	–25/+65	°C	
Storage temperature range	T_{stg}			
DC voltage	V_{DC}			
AC voltage	V_{pp}			

12.IC DESCRIPTIONS

In following chapters you can find details of ICs used in the chassis and the SS B(Small signal board)

TDA6108JF
PNX3000
SDRAM 64MBIT
NE56610-29
PNX300X
TDA7480L
TDA8177&STV9379FA
MC44608
TFMS5360
HT48RA0A
CS51033
FLASH 32 MBIT
STS5PF30L
M24C64WBN6
LM7808
TCET1102G
TL431

12.1.TDA6108JF (IC900)

12.1.1.General Description

The TDA6108JF includes three video output amplifiers in one plastic DIL-bent-SIL 9-pin medium power (DBS9MPF) package (SOT111-1), using high-voltage DMOS technology, and is intended to drive the three cathodes of a color CRT directly. To obtain maximum performance, the amplifier should be used with black-current control.

12.1.2.Features

- Typical bandwidth of 9.0 MHz for an output signal of 60 V (p-p)
- High slew rate of 1850 V/ms
- No external components required
- Very simple application
- Single supply voltage of 200 V
- Internal reference voltage of 2.5 V
- Fixed gain of 51
- Black-Current Stabilization (BCS) circuit
- Thermal protection

12.1.3.Pinning

SYMBOL	PIN	DESCRIPTION
$V_{i(1)}$	1	inverting input 1
$V_{i(2)}$	2	inverting input 2
$V_{i(3)}$	3	inverting input 3
GND	4	ground (fin)
I_{om}	5	black current measurement output
V_{DD}	6	supply voltage
$V_{oc(3)}$	7	cathode output 3
$V_{oc(2)}$	8	cathode output 2
$V_{oc(1)}$	9	cathode output 1

12.2.HT48RA0A

12.2.1.General Description

The HT48RA0A is an 8-bit high performance RISC-like microcontroller specifically designed for multiple I/O product applications. The device is particularly suitable for use in products such as infrared remote controllers and various subsystem controllers. A HALT feature is included to reduce power consumption.

12.2.2.Features

• Operating voltage: 2.2V~3.6V
• Ten bidirectional I/O lines
• Six Schmitt trigger input lines
• One carrier output (1/2 or 1/3 duty)
• On-chip crystal and RC oscillator
• Watchdog Timer
• 1K_14 program EPROM
• 32_8 data RAM
• HALT function and wake-up feature reduce power consumption
• 62 powerful instructions
• Up to 1_s instruction cycle with 4MHz system clock
• All instructions in 1 or 2 machine cycles
• 14-bit table read instructions
• One-level subroutine nesting
• Bit manipulation instructions
• 20-pin/24-pin SOP package

12.2.3.Pin Descriptions

Pin Name	I/O	Code Option	Description
PB0, PB1	I/O	Wake-up or None	2-bit bidirectional input/output lines with pull-high resistors. Each bit can be determined as NMOS output or Schmitt trigger input by software instructions. Each bit can also be configured as wake-up input by code option.
PC0/REM	O	Level or Carrier	Level or carrier output pin PC0 can be set as CMOS output pin or carrier output pin by code option.
VDD	-	-	Positive power supply
OSC2 OSC1	I/O	Crystal or RC	OSC1, OSC2 are connected to an RC network or a crystal (determined by code option) for the internal system clock. In the case of RC operation, OSC2 is the output terminal for 1/4 system clock (NMOS open drain output).
VSS	-	-	Negative power supply, ground
RES	I	-	Schmitt trigger reset input. Active low.
PB2~PB7	I	Wake-up or None	6-bit Schmitt trigger input lines with pull-high resistors. Each bit can be configured as a wake-up input by code option.
PA0~PA7	I/O	-	Bidirectional 8-bit input/output port with pull-high resistors. Each bit can be determined as NMOS output or Schmitt trigger input by software instructions.

12.3.PNX3000 (IC400)

12.3.1.General Description

The PNX3000 is an analog front end for digital video processors. It contains an IF circuit for both analog and digital broadcast signals, and input selectors and A to D converters for analog video and audio signals. The digital output signals are made available via three serial data links.

The IC has a supply voltage of 5V. The supply voltage of the analog audio part can be 5V or 8V, depending on the maximum signal amplitudes that are required.

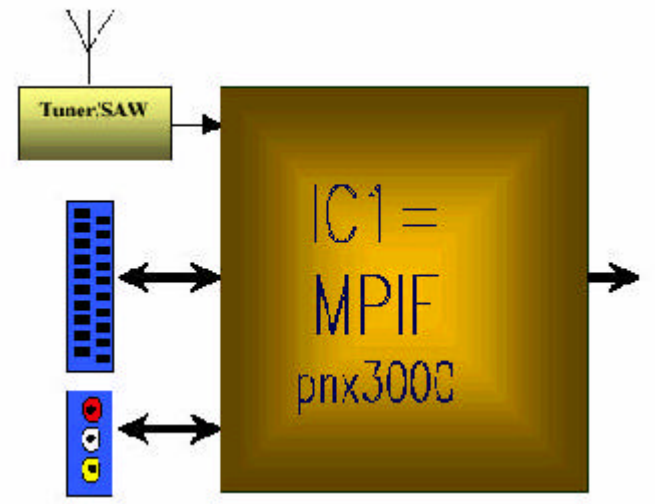

12.3.2.Features

• Multi-standard vision IF circuit with alignment-free PLL demodulator without external components
• Internal (switchable) time-constant for the IF-AGC circuit
• DTV IF circuit for gain control of digital broadcast TV signals.
• Sound IF amplifier with separate AGC circuit for quasi split sound
• IF circuit can also be used for intercarrier sound
• Analog demodulator for AM sound
• Integrated sound trap and group delay correction
• Video ident function detects the presence of a video signal
• Video source selector with 4 external CVBS or YC inputs and 2 analog CVBS outputs with independent source selection for each output
• Two linear inputs for 1fH or 2fH RGB signals with source selector. The RGB signals are converted to YUV before A to D conversion. Both inputs can also be used as YPB PR input for DVD or set top box
• Integrated anti-alias filters for video A to D converters
• Four 10-bit video A to D converters for the conversion of CVBS, YC, YUV and down mixed sound IF signals
• Up to three different A to D converted video channels are simultaneous available (e.g. CVBS and YC and YUV)
• Audio source selector with 5 stereo inputs for analog audio and two microphone inputs
• Two microphone amplifiers with adjustable gain
• Three analog audio outputs for SCART and Line out with independent source selection for each output
• Four 1-bit audio sigma delta A to D converters for the conversion of audio and microphone signals
• Three serial data link transmitters for interfacing with the digital video processor. The bit rate is 594 Mbits/sec per data link
• Voltage to current converter for driving of external East-West power amplifier
• I^2C-bus transceiver with selectable slave address and maskable interrupt output

SYMBOL	PIN	DESCRIPTION
CVBS2	1	CVBS2 input
VAUDO	2	DC output voltage for supply of audio DACs in digital decoder
VAUDS	3	sense voltage for audio DACs supply
CVBS/Y3	4	external CVBS/Y3 input
C3	5	external CHROMA3 input
GND_VSW	6	ground video switch
BGDEC	7	bandgap decoupling
CVBS/Y4	8	external CVBS/Y3 input
C4	9	external CHROMA3 input
fuse	10	fused lead
GND_FILT	11	ground filters
CVBS_DTV	12	input for CVBS encoded signal from DTV decoder
RREF	13	reference current input
VCC_FILT	14	supply voltage filters (5V)
YCOMB	15	Y signal from 3D Comb filter
CCOMB	16	C signal from 3D Comb filter
AMEXT	17	external AM mono input
TESTPIN3	18	test pin 3 (leave open)
CVBSOUTA	19	CVBS or Y+CHROMA output A
VDEFLO	20	DC output voltage for supply of deflection DACs in digital decoder
VDEFLS	21	sense voltage for deflection DACs supply
CVBSOUTB	22	CVBS or Y+CHROMA output B
fuse	23	fused lead
TESTPIN2	24	test pin 2 (connect to ground)
R1/PR1 /V1	25	R1/PR1 /V1 input
G1/Y1/Y1	26	G1/Y1/Y1 input
B1/PB1 /U1	27	B1/PB1 /U1 input
VCC_RGB	28	supply voltage RGB matrix (5V)
GND_RGB	29	ground RGB matrix
R2/PR2 /V2	30	R2/PR2 /V2 input
G2/Y2/Y2	31	G2/Y2/Y2 input
B2/PB2 /U2	32	B2/PB2 /U2 input
fuse	33	fused lead
GND_VADC	34	ground video ADCs
VCC_VADC	35	supply voltage video ADCs (5V)
EWVIN	36	East-West input voltage
EWIOUT	37	East-West output current
REW	38	East-West voltage to current conversion resistor
ADR	39	I^2C address selection
XREF	40	XTAL reference frequency input
fuse	41	fused lead
IRQ	42	interrupt request output
SDA	43	I^2C serial data input/output
SCL	44	I^2C serial clock input
HV_SEC	45	horizontal and vertical sync input for secondary video channel
HV_PRIM	46	horizontal and vertical sync input for primary video channel
VD2V5	47	decoupling of internal digital supply voltage
GND_DIG	48	digital ground
VCC_DIG	49	digital supply voltage (5V)
STROBE3N	50	strobex negative datalink3
STROBE3P	51	strobex positive datalink3
DATA3N	52	data positive datalink3
DATA3P	53	data positive datalink3
fuse	54	fused lead
STROBE2N	55	strobex negative datalink2
STROBE2P	56	strobex positive datalink2
DATA2N	57	data positive datalink2

DATA2P	58	data positive datalink2
GND_I2D	59	ground datalinks
STROBE1N	60	strobex negative datalink1
STROBE1P	61	strobex positive datalink1
DATA1N	62	data negative datalink1
DATA1P	63	data positive datalink1
VCC_I2D	64	supply voltage datalinks (5V)
SCART2R	65	audio output for SCART 2 right
SCART2L	66	audio output for SCART 2 left
LINER	67	audio line output right
LINEL	68	audio line output left
SCART1R	69	audio output for SCART1 right
SCART1L	70	audio output for SCART1 left
fuse	71	fused lead
DSNDR2	72	audio signal from digital decoder right 2
DSNDL2	73	audio signal from digital decoder left 2
DSNDR1	74	audio signal from digital decoder right 1
DSNDL1	75	audio signal from digital decoder left 1
GND_AADC	76	ground audio ADCs
VCC_AADC	77	supply voltage audio ADCs (5V)
fuse	78	fused lead
R4	79	right input audio 4
L4	80	left input audio 4
R3	81	right input audio 3
L3	82	left input audio 3
R2	83	right input audio 2
L2	84	left input audio 2
R1	85	right input audio 1
L1	86	left input audio 1
GND2_ASW	87	ground audio switch
VCC2_ASW	88	supply voltage audio switch (audio output buffers, 5V or 8V)
VAADCREF	89	decoupling of reference voltage for audio ADCs
VAADCN	90	0V reference voltage for audio ADCs (GND)
VAADCP	91	full scale reference voltage for audio ADCs (5V)
MIC2N	92	microphone input 2 neg
MIC2P	93	microphone input 2 pos
MIC1N	94	microphone input 1 neg
MIC1P	95	microphone input 1 pos
fuse	96	fused lead
GND1_ASW	97	ground audio switch
VCC1_ASW	98	supply voltage audio switch (audio input buffers, 5V or 8V)
SIFINP	99	sound IF input positive
SIFINN	100	sound IF input negative
SIFAGC	101	control voltage for SIF AGC
DTVIFAGC	102	control voltage for DTV IF AGC
DTVIFINP	103	DTV IF input positive
DTVIFINN	104	DTV IF input negative
TUNERAGC	105	tuner AGC output
fuse	106	fused lead
VIFINP	107	vision IF input positive
VIFINN	108	vision IF input negative
DTVIFPLL	109	loop filter DTVIF PLL demodulator
VCC_IF	110	supply voltage IF circuit (5V)
VIFPLL	111	loop filter VIF PLL demodulator
GND1_IF	112	ground IF circuit
2NDSIFEXT	113	2ndSIF input
2NDSIFAGC	114	2ndSIF AGC capacitor
GND2_IF	115	ground IF circuit
DTVOUTP	116	DTV output positive

DTVOUTN	117	DTV output negative
VCC_SUP	118	supply of supply circuit (5V)
fuse	119	fused lead
CVBSOUTIF	120	CVBS output of IF circuit
GND_SUP	121	ground of supply circuit
VCC1_VSW	122	supply of video switch (5V)
CVBS0	123	CVBS0 input (to be used for CVBS from IF part)
TESTPIN1	124	test pin 1 (connect to ground)
VCC2_VSW	125	supply of video switch (5V)
CVBS1	126	CVBS1 input
R5	127	right input audio 5
L5	128	left input audio 5

Important pins need to be checked in case of troubleshooting

Signal	Measure	Value
CVBS/RGB Input voltage	Input pins	1Vpk-pk
CVBS Output voltage	Output pins	2 Vpk-pk
Maximum input audio voltage	Input pins	2 Vrms
Maximum output audio voltage	Output pins	2 Vrms

12.4.CS51033 (IC 104)

12.4.1.General Description

The CS51033 is a switching controller for use in dc–dc converters. It can be used in the buck topology with a minimum number of external components. The CS51033 consists of a 1.0 A power driver for controlling the gate of a discrete P–channel transistor, fixed frequency oscillator, short circuit protection timer, programmable Soft Start, precision reference, fast output voltage monitoring comparator, and output stage driver logic with latch.

The high frequency oscillator allows the use of small inductors and output capacitors, minimizing PC board area and systems cost. The programmable Soft Start reduces current surges at start up. The short circuit protection timer significantly reduces the PFET duty cycle to approximately 1/30 of its normal cycle during short circuit conditions.

The CS51033 is available in an 8–Lead SO package.

12.4.2.Features

- 1.0 A Totem Pole Output Driver
- High Speed Oscillator (700 kHz max)
- No Stability Compensation Required
- Lossless Short Circuit Protection
- 2.0% Precision Reference
- Programmable Soft Start
- Wide Ambient Temperature Range:
  - Industrial Grade: –40°C to 85°C
  - Commercial Grade: 0°C to 70°C

12.4.3.Pin Description

PIN NUMBER	PIN SYMBOL	FUNCTION
1	V_{GATE}	Driver pin to gate of external PFET.
2	P_{GND}	Output power stage ground connection.
3	C_{OSC}	Oscillator frequency programming capacitor.
4	GND	Logic ground.
5	V_{FB}	Feedback voltage input.
6	V_{CC}	Logic supply voltage.
7	CS	Soft Start and fault timing capacitor.
8	V_C	Driver supply voltage.

12.5.SDRAM 64MBIT (IC315)

12.5.1.General Description

Please note that in the following explanation one of the SDRAM alternative is used.

The K4S641632D is 67,108,864 bits synchronous high data rate Dynamic RAM organized as 4 x 1,048,576 words by 16 bits, fabricated with SAMSUNG¢s high performance CMOS technology. Synchronous design allows precise cycle control with the use of system clock I/O transactions are possible on every clock cycle. Range of operating frequencies, programmable burst length and programmable latencies allow the same device to be useful for a variety of high bandwidth, high performance memory system applications.

12.5.2.Features

• JEDEC standard 3.3V power supply
• LVTTL compatible with multiplexed address
• Four banks operation
• MRS cycle with address key programs
-. CAS latency (2 & 3)
-. Burst length (1, 2, 4, 8 & Full page)
-. Burst type (Sequential & Interleave)
• All inputs are sampled at the positive going edge of the system clock
• Burst read single-bit write operation
• DQM for masking
• Auto & self refresh
• 64ms refresh period (4K cycle)

12.5.3.Pin Description

PIN	NAME	INPUT FUNCTION
CLK	System clock	Active on the positive going edge to sample all inputs.
CS	Chip select	Disables or enables device operation by masking or enabling all inputs except CLK, CKE and L(U)DQM
CKE	Clock enable	Masks system clock to freeze operation from the next clock cycle. CKE should be enabled at least one cycle prior to new command. Disable input buffers for power down in standby.
A0 ~ A11	Address	Row/column addresses are multiplexed on the same pins. Row address : RA0 ~ RA11, Column address : CA0 ~ CA7
BA0 ~ BA1	Bank select address	Selects bank to be activated during row address latch time. Selects bank for read/write during column address latch time.
RAS	Row address strobe	Latches row addresses on the positive going edge of the CLK with RAS low. Enables row access & precharge.
CAS	Column address strobe	Latches column addresses on the positive going edge of the CLK with CAS low. Enables column access.
WE	Write enable	Enables write operation and row precharge. Latches data in starting from CAS, WE active.
L(U)DQM	Data input/output mask	Makes data output Hi-Z, tSHZ after the clock and masks the output. Blocks data input when L(U)DQM active.
DQ0 ~ 15	Data input/output	Data inputs/outputs are multiplexed on the same pins.
VDD/VSS	Power supply/ground	Power and ground for the input buffers and the core logic.
VDDQ/VSSQ	Data output power/ground	Isolated power supply and ground for the output buffers to provide improved noise immunity.
N.C/RFU	No connection /reserved for future use	This pin is recommended to be left No Connection on the device.

12.6.FLASH (IC 314)

12.6.1.General Description

The MT28F128J3 is a nonvolatile, electrically block-erasable (Flash), programmable memory containing 134,217,728 bits organized as 16,777,218 bytes (8 bits) or 8,388,608 words (16 bits). This 128Mb device is organized as one hundred twenty-eight 128KB erase blocks.

The MT28F640J3 contains 67,108,864 bits organized as 8,388,608 bytes (8 bits) or 4,194,304 words (16 bits). This 64Mb device is organized as sixty-four 128KB erase blocks.

Similarly, the MT28F320J3 contains 33,554,432 bits organized as 4,194,304 bytes (8 bits) or 2,097,152 words (16 bits). This 32Mb device is organized as thirty-two 128KB erase blocks.

These three devices feature in-system block locking. They also have common Flash interface (CFI) that permits software algorithms to be used for entire families of devices. The software is device-independent, JEDEC ID-independent with forward and backward compatibility.

Additionally, the scalable command set (SCS) allows a single, simple software driver in all host systems to work with all SCS-compliant Flash memory devices. The SCS provides the fastest system/device data transfer rates and minimizes the device and system-level implementation costs.

To optimize the processor-memory interface, the device accommodates VPEN, which is switchable during block erase, program, or lock bit configuration, or hard-wired to VCC, depending on the application. VPEN is treated as an input pin to enable erasing, programming, and block locking. When VPEN is lower than the VCC lockout voltage (VLKO), all program functions are disabled. Block erase suspend mode enables the user to stop block erase to read data from or program data to any other blocks. Similarly, program suspend mode enables the user to suspend programming to read data or execute code from any unsuspended blocks.

VPEN serves as an input with 2.7V, 3.3V, or 5V for application programming. VPEN in this Q-Flash _ family can provide data protection when connected to ground. This pin also enables program or erase lockout during power transition.

Micron's even-sectored Q-Flash devices offer individual block locking that can lock and unlock a block using the sector lock bits command sequence.

Status (STS) is a logic signal output that gives an additional indicator of the internal state machine (ISM) activity by providing a hardware signal of both status and status masking. This status indicator minimizes central processing unit (CPU) overhead and system power consumption. In the default mode, STS acts as an RY/BY# pin. When LOW, STS indicates that the ISM is performing a block erase, program, or lock bit configuration. When HIGH, STS indicates that the ISM is ready for a new command.

Three chip enable (CE) pins are used for enabling and disabling the device by activating the device's control logic, input buffer, decoders, and sense amplifiers.

BYTE# enables the device to be used in x8 or x16 read/write mode; BYTE# = 0 selects an 8-bit mode, with address A0 selecting between the LOW and HIGH byte, while BYTE# = 1 selects a 16-bit mode. When BYTE# = 1, A1 becomes the lowest-order address line with A0 being a no connect.

RP# is used to reset the device. When the device is disabled and RP# is at Vcc, the standby mode is enabled. A reset time (t RWH) is required after RP# switches HIGH until outputs are valid. Likewise, the device has a wake time (t RS) from RP# high until writes to the command user interface (CUI) are recognized. When RP# is at GND, it provides write protection, resets the ISM, and clears the status register.

A variant of the MT28F320J3 also supports the new security block lock feature for additional code security. This feature provides an OTP function for the device. (Contact factory for availability.)

The MT28F320J3 and the MT28F640J3 are manufactured using the 0.18µm process technology, and the MT28F128J3 is manufactured using the 0.15µm process technology.

12.6.2.Features

- x8/x16 organization
- One hundred twenty-eight 128KB erase blocks (128Mb)
  Sixty-four 128KB erase blocks (64Mb)
  Thirty-two 128KB erase blocks (32Mb)
- VCC, VCCQ, and VPEN voltages:
  2.7V to 3.6V VCC operation
  2.7V to 3.6V, or 5V VPEN application programming
- Interface Asynchronous Page Mode Reads:
  150ns/25ns or 120ns/25ns read access time (128Mb)
  120ns/25ns or 115ns/25ns read access time (64Mb)
  110ns/25ns read access time (32Mb)
- Manufacturing ID (ManID)
  Intel® (0x89h)

Micron® (0x2Ch)
• Industry-standard pinout
• Inputs and outputs are fully TTL-compatible
• Common Flash Interface (CFI) and Scalable
Command Set
• Automatic write and erase algorithm
• 5.6µs-per-byte effective programming time using write buffer
• 128-bit protection register
64-bit unique device identifier
64-bit user-programmable OTP cells
• Enhanced data protection feature with VPEN = VSS
Flexible sector locking
Sector erase/program lockout during power transition
•Security OTP block f feature
Permanent block locking (Contact factory for availability)
• 100,000 ERASE cycles per block
• Automatic suspend options:
Block Erase Suspend-to-Read
Block Erase Suspend-to-Program
Program Suspend-to-Read

12.6.3.Pin/Ball Descriptions

56-PIN TSOP NUMBERS	64-BALL FBGA NUMBERS	SYMBOL	TYPE	DESCRIPTION
55	G8	WE#	Input	Write Enable: Determines if a given cycle is a WRITE cycle. If WE# is LOW, the cycle is either a WRITE to the command execution logic (CEL) or to the memory array. Addresses and data are latched on the rising edge of the WE# pulse.
14, 2, 29	B4, B8, H1	CE0, CE1, CE2	Input	Chip Enable: Three CE pins enable the use of multiple Flash devices in the system without requiring additional logic. The device can be configured to use a single CE signal by tying CE1 and CE2 to ground and then using CE0 as CE. Device selection occurs with the first edge of CE0, CE1, or CE2 (CEx) that enables the device. Device deselection occurs with the first edge of CEx that disables the device (see Table 4 on page 14).
16	D4	RP#	Input	Reset/Power-Down: When LOW, RP# clears the status register, sets the ISM to the array read mode, and places the device in deep power-down mode. All inputs, including CEx, are "Don't Care," and all outputs are High-Z. RP# must be held at VIH during all other modes of operation.
54	F8	OE#	Input	Output Enables: Enables data output buffers when LOW. When OE# is HIGH, the output buffers are disabled.
32, 28, 27, 26, 25, 24, 23, 22, 20, 19, 18, 17, 13, 12, 11, 10, 8, 7, 6, 5, 4, 3, 1, 30	G2, A1, B1, C1, D1, D2, A2, C2, A3, B3, C3, D3, C4, A5, B5, C5, D7, D8, A7, B7, C7, C8, A8, G1	A0 _ A21/ (A22) (A23)	Input	Address inputs during READ and WRITE operations. A0 is only used in x8 mode and will be a NC in x16 mode (the input buffer is turned off when BYTE = HIGH). A22 (pin 1, ball A8) is only available on the 64Mb and 128Mb devices. A23 (pin 30, ball G1) is only available on the 128Mb device.
31	F1	BYTE#	Input	BYTE# low places the device in the x8 mode. BYTE# high places the device in the x16 mode and turns off the A0 input buffer. Address A1 becomes the lowest order address in x16 mode.
15	A4	VPEN	Input	Necessary voltage for erasing blocks, programming data, or configuring lock bits. Typically, V_{PEN} is connected to VCC. When V_{PEN} _ V_{PENLK}, this pin enables hardware write protect.

33, 35, 38, 40, 44, 46, 49, 51, 34, 36, 39, 41, 45, 49, 51, 34, 36, 39, 41, 45, 47, 50, 52	F2, E2, G3, E4, E5, G5, G6, H7, E1, E3, F3, F4, F5, H5, G7, E7	DQ0–DQ15	Input/ Output	Data I/O: Data output pins during any READ operation or data input pins during a WRITE. DQ8–DQ15 are not used in byte mode (BYTE = LOW).
53	E8	STS	Output	Status: Indicates the status of the ISM. When configured in level mode (default), STS acts as a RY/BY# pin. When configured in its pulse mode, it can pulse to indicate program and/or erase completion. Tie STS to $V_{CC}Q$ through a pull-up resistor.
43	G4	$V_{CC}Q$	Supply	$V_{CC}Q$ controls the output voltages. To obtain output voltage compatible with system data bus voltages, connect $V_{CC}Q$ to the system supply voltage.
9, 37	H3, A6	V_{CC}	Supply	Power Supply: 2.7V to 3.6V.
21, 42, 48	B2, H4, H6	V_{SS}	Supply	Ground.
56	H8	NC	—	No Connect: These may be driven or left unconnected. Pin 1 and ball A8 are NCs on the 32Mb device. Pin 30 and ball G1 are NCs on the 32Mb and 64Mb devices.
—	B6, C6, D5, D6, E6, F6, F7, H2	DNU	—	Do Not Use: Must float to minimize noise.

12.7.NE56610-29 (RESET IC) (IC 316)

12.7.1.General Description

The NE56610-29 is a family of devices designed to generate a reset signal for a variety of microprocessor and logic systems. Accurate reset signals are generated during momentary power interruptions or when ever power supply voltages sag to intolerable levels. The NE56610-29 incorporates an internal timer to provide reset delay and ensure proper operating voltage has been attained. An Open Collector output topology provides adaptability for a wide variety of logic and microprocessor systems.

SOT23-5 surface mount package is used.

12.7.2.Features

• 3.3V operating voltage (VDDE)
• SOT23-5 surface mount package
• Offered in reset thresholds 2.9 V DC
• Internal reset delay timer is 50ms

12.7.3.Pin Description

PIN NUMBER	SYMBOL	DESCRIPTION
1	M/R	Manual Reset input. Connect to ground when not using.
2	SUB	Substrate pin. Connect to ground.
3	GND	Ground
4	V_{OUT}	Reset HIGH output pin
5	V_{cc}	Positive power supply input

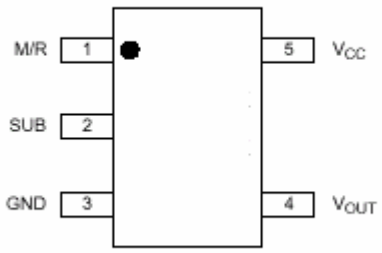

12.8.STS5PF30L (IC105)
12.8.1.Description
STS5PF30L is a Power MOSFET.

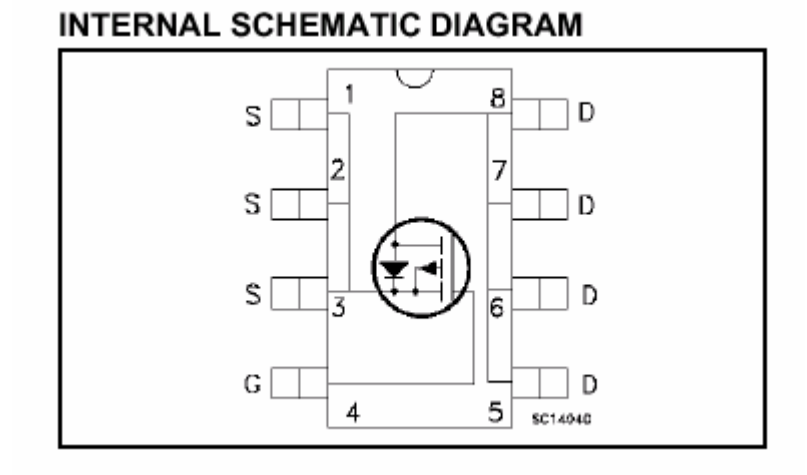

12.8.2.Features
• TYPICAL RDS(on) = 0.070 ? ?
• STANDARD OUTLINE FOR EASY
AUTOMATED SURFACE MOUNT ASSEMBLY
• LOW THRESHOLD DRIVE

TYPE	V_{DSS}	R_{DS}(on)	I_D
STS5PF30L	30V	<0.080 O	5 A

12.9.PNX300X (IC313)
This IC is the heart of the TV set for small signal processing.

12.9.1.General Description of the Digital One Chip System

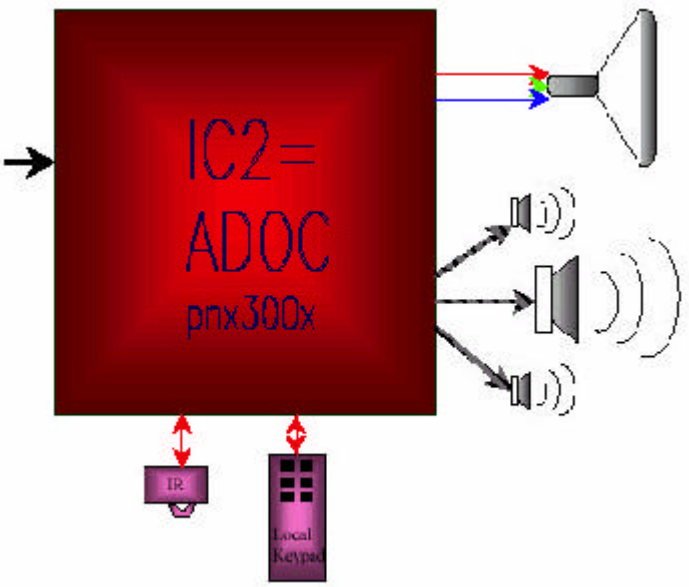

DOC Hardware
The Digital One Chip System (DOC) is a system concept based on a digital processor for double-scan TV receivers. It is a global, multi-standard system primarily designed for the reception and processing of analog broadcast signals. The DOC system serves the TV functionality for small signal processing of audio, video, VBI services, graphics and control. An integrated MIPS 1910 processor runs the DOCware software stack. The Digital One Chip DOCware software is stored in a non-volatile external memory, normally flash memory. The following figure shows the hardware system architecture of a TV chassis based on the DOC system.
The dual stream architecture of the DOC system allows audio and video processing of two A/V sources simultaneously. The two video streams can be displayed in several programmable ways (main screen, PIP or DW). The two audio streams are audible via the TV loudspeakers and/or the headphones. If two TV broadcast signals have to be processed simultaneously, an external IF processor and a PIP Mono Sound Demodulator/Decoder is needed.
For the memory-based features in the DOC system (like scan rate conversion, dynamic noise reduction and PIP/DW applications) external SDRAM is needed. The memory size requirements are directly related to which memory-based features have to be supported. The amount of SDRAM required varies per feature but also varies with combination of features.
The DOC system also has 128kByte of internal SRAM memory. This memory is used to run low latency, timing critical parts of the software. Under these circumstances no external SDRAM is needed.
The DOC system is built around the ADOC IC. This chip implements all TV functions in digital technology. Only a few functions (like AD-conversion, IF processing and source select) are implemented in an analog companion IC, the MPIF.
The MPIF is meant as an analog video and audio pre-processing unit for the TV processor ADOC. It contains the high frequent IF part and all the analog video and audio source switching for external in- and outputs. MPIF can handle CVBS, Y/C, RGB (1Fh/2Fh) and YPrPb (1Fh/2Fh) video signals as well as stereo Left/Right and Second Sound IF (low-IF 5-6MHz, 10.7Mhz) audio signals. MPIF converts the selected video and audio streams from the analog to the digital domain. Via three high-speed serial data links the digitized audio and video signals are streamed to the ADOC IC for further processing.
ADOC is a fully integrated, digitally implemented TV processor for audio, video, VBI services, graphics and control.
The split-up between an analog (MPIF) and a digital part (ADOC) has the following advantages:
• High frequency IF part can be included in the concept
• Less A/D and D/A converters needed for source switching
• Better performance for AD converters (realized in analog design environment, more accurate, less tolerance)
• Critical items like reference voltages can be realized in the analog environment

• Integrated SCART buffers
The DOC system is designed to facilitate a very cost effective TV chassis. Some of the measures taken are:
• One crystal design. Only one reference crystal is required for the MPIF and ADOC,
• The advanced geometry corrections in the DOP result in a simple horizontal deflection circuitry. Linearity coils are not required

12.9.2.Features of the ADOC Processor

Color Decoder and Sync Processing

• Multi standard color decoder supporting PAL-B, G, D, H, I, N, Combination-PAL N, PAL M, NTSC M, NTSC-Japan, NTSC 4.43 and SECAM
• Automatic color standard recognition and selection (PAL/SECAM/NTSC)
• Fully programmable static or Automatic Gain Control (AGC) for all analogue video base band signals.
• Resolution of CVBS or Y/C signal after AGC: 9 bits (including sync)
• AGC for chrominance (PAL and NTSC only) for CVBS and Y/C sources
• Programmable clamp window for selected video base band signal(s)
• Horizontal (including 3-level sync for 2Fh) and vertical sync detection.
• Adaptive 2/4-line delay Comb filter for two dimensional chrominance/luminance separation
• PAL delay line for correcting PAL phase errors
• Maskable interrupt generation to MIPS notifying any change of signal conditions
• Compliant with and detection of Macrovision up to version 7.1.
• Possibility of Fast Blank SCART RGB insertion in CVBS input mode, not in Y/C.
• Second multi standard color decoder for low-cost PIP
– Supports CVBS standards as listed above
– No comb filter
– No Y/C performance (Y and C are being summed before decoding)
– No fast blanking with Component inputs

VBI Data Capture

• Two independent data capture units (DCU1 and DCU2) for standard data rate streams
• Multi-standard data capture. Both DCUs can always execute the following services:
– Line 21 Data Services (Closed Caption)
– European Wide Screen Signalling (WSS line23)
– PDC A & B (VPS and TeleText packet 8/30)
– World Standard TeleText.
• Services performed by TeleText application:
– Data Broadcast (packets X/30, X/31)
– Channel Identification (packet 8/30)
• Data type selectable on line-by-line basis independently for odd and even fields
• Multi-page acquisition during VBI
• Single page acquisition during full field
• DMA of packets and status bits to memory (embedded SRAM)
• Automatic identification of VBI data standard supported

Teletext storage

• Error correction and decoding performed by DOCware software
• Page management performed by DOCware software
• Storage of up to 8 pages of TeleText internally
• Storage of more than 8 TeleText pages requires external memory (SDRAM)

Picture measurements

• Noise measurement in active video
• Black Bar detection
• Sharpness measurement

Picture Improvements

• Field based noise reduction (on main only)
• Horizontal Dynamic Peaking/ Luminance Transient Improvement (LTI)
• SCAn VElocity Modulation (SCAVEM or SVM) and Dynamic Contrast Control (DCC)
• Dynamic Color Transient Improvement (DCTI)
• Dynamic Skin Tone control

• Blue Stretch
• Green Enhancement
• Black Stretch
• 32-bins histogram
• Electrical Local Doming Protection

Picture in Picture / Double window
• Requires external memory to be connected to SDRAM interface
• Second input through second color decoder. Can be selected to be either main or sub.
• YCrCb storage in 4:2:2 format. 8 bits per component. Dithering adopted to have 9 bits effectively.
• No joint line/crossover errors
• Supporting Double Window displaying both a PAL (50 Hz) and an NTSC (60 Hz) signal.
• Double window text. Displaying a TeleText page next to a TV broadcast. This feature is functional without the external Memory in 50 Hz mode.
• For proper aspect ratio of Double Window display on 4/3 screen vertical scaling by deflection can be adopted

Scan Rate Conversion
• This requires external memory connected to SDRAM interface
• Line flicker reduction
• Full interlaced performance (provided sufficient memory)

Video H/V Scaling
• Horizontal Panorama/customer defined Scaling in video path (not affecting graphics)
• Vertical Scaling by vertical deflection

Audio Base band Switching and Interfaces
• 5x Analogue outputs (Left, Right, Subwoofer, Centre and Surround speaker)
• 1x Left and Right Head Phones output

Sound Demodulator/Decoder
• Two FM/AM Demodulator channels with programmable mixer frequencies and four different filter bandwidths:
– Multi-standard FM demodulation (B/G, D/K, I, M and N standard)
– Optional AM demodulation (L/L' standard)
– FM pilot carrier present detector (for A2 sound systems)
• FM-A2 Decoder:
– Detection of ID signal for second carrier
– Decoding for three analog multi-channel systems (A2, A2+ and A2*) and satellite sound
– Identification A2 systems (B/G, D/K and M standard)
– Supporting Korean 2SC standard
• BTSC Stereo/SAP Decoder:
– M/BTSC and N standards supported
– Processing of MTS/MPX signal
– Detection of pilot carrier with pilot lock indicator
– AM demodulation of stereo sub-carrier
– Detection of SAP sub carrier
– SAP decoder
– FM demodulation of SAP carrier (without dbx®) simultaneously with stereo decoding, or mono plus SAP with dbx®
– dbx® noise reduction on either (L-R) or SAP signal
• Japan MTS Decoder:
– Processing of MPX signal
– Detection of the Identification signal
– FM demodulation of sub-carrier for stereo or bilingual reproduction
• NICAM demodulator and decoder (B/G, I and L/L' standard):
– DQPSK demodulation for different standards, simultaneously with 1-channel FM demodulation
– NICAM decoding
• Auto Standard Detection Mode (ASD)
• Demodulator Decoder Easy Programming (DDEP)
• FM-Radio decoder
• Identification circuit for all standards

• Decoding and adaptive de-emphasis for satellite FM (ASTRA)
• Monitor selection for FM/AM DC values and signals, with peak detection option
• Soft-mute for DEMDEC outputs DEC, MONO and SAP
• Sample rate conversion (SRC) for up to three demodulated terrestrial audio signals. It is possible to process SCART signals together with demodulated terrestrial signals. Up to five signals (stereo counting for 2) can be processed at a time.

Audio Processing
• Virtual Dolby® ('422' mode and '423' mode) (3)
• Bass management
• Dynamic Bass Boost (4)
Automatic volume levelling (AVL)
• Programmable Level Adjust at inputs of switch matrix
• Volume control:
– Separate volume control on headphone
• Balance control on left/right speaker and on left/right headphone by use of trim control
• 5-band graphic equalizer or treble/bass control
• Notch filter for acoustic compensation
• Soft mute on all outputs
• Beeper
• Pseudo Hall/Matrix:
– Pseudo Hall provides (L+R)/2 on Centre and (L+R)/2 with 30ms delay on Surround
– Pseudo Matrix provides (L+R)/2 on Centre and (L-R)/2 with 30ms delay on Surround

Character Based Graphics
• Characters Based Display:
– 1440 pixels per line of which 5% in over-scan.
• Level 1.5 WST TeleText compliant
• Double Window TeleText display:
– Display of two 40 character wide Level 1.5 TeleText pages side by side.
– Display of 40 character wide Level 1.5 TeleText and Video side by side.
• Line 21 Data Services compliant
• Supports OSD with up to 8 colors out of a palette of 4096 colors
• Selectable character size
• Dynamically Redefinable Characters (DRCs)
– Internal memory up to 64 characters

RGB Processing
• Fully programmable YCrCb to RGB matrix
• Saturation control done using matrix
• Contrast and brightness control with 8 bits resolution
• D/A converters for RGB and Scan Velocity Modulation:
– Clock frequency 81MHz (fixed)
– Sample Rate Conversion to convert from orthogonal pixels
– 10 bits resolution (11 bits virtual using dithering of LSB)
– 2160 interpolated pixels per line
• 1440 pixels per line (of which 5% in over scan) at graphics blender (clock frequency 54 MHz)
• Forced super blanking during start-up or fault conditions
• Programmable horizontal and vertical retrace blanking via line and pixel number
• Separate beam current control on video and graphics
• Peak White limiter for video path
• Soft clipping for video path
• Hard clipping for graphics path
• Advanced Scan Velocity Processing:
– Scan Velocity modulation working on both Video and Graphics
– Dynamic contrast
• Continuous Cathode Calibration (=cut off control):
– System allows both for one-point and two-point calibration
• Graphics/video blender with mixture level (0% to 100% in 16 steps)

AD Converters for Display Functions
• 3x Sigma Delta ADC for Black Current, EHT, Beam Current Limiting measurement Clock frequency 54MHz

Deflection & Geometry
• Horizontal time base for display based on digital PLL
• Very good jitter performance of about. +/- 300 ps of the horizontal drive pulse
• Low power start-up mode from standby
• Slow start/stop
• Fixed beam-current switch-off
• Vertical and horizontal geometry processing. Special features of the horizontal geometry processor are:
– inner-pincushion correction
– horizontal non-linearity correction
• Auxiliary output
– can be used to generate waveform with frequency of vertical deflection (for example quadrupole correction for flat picture tubes)
• Vertical guard input
• Flash detection input
• EHT overvoltage protection (X-Ray) input
• Horizontal drive output

Microprocessor
• TV control by embedded 32 bit RISC processor
– Philips MIPS PR1910, 54MHz
• Cache Structure
– Unified 8Kbyte Instruction/Data Cache
• Co-Processor:
– 2x 32bit system clock Count/Compare (Timer1,2) Registers
– 1x 32bit system clock Count/Compare (Timer3) configurable as Watchdog Timer
• Debug Support:
– MIPS JTAG compliant
– Software / Hardware Breakpoint
– Single Stepping
– Real Time Trace

TV Control Peripherals
• General Purpose IO (GPIO):
– 32 total GPIO pins, 28 with secondary functions stated bellow (4 GPIO free pins)
• Two I 2 C Interface units
• Two General Purpose Counter/Compare (Timer) units
• Universal Asynchronous Receiver Transmitter (UART)
• Eight external interrupts
• Analogue to Digital converter:
– 6 multiplexed inputs
– Programmable resolution of up to 10 bits
• Remote Control Receiver and Transmitter

Reset
• Reset via external input

Internal Memory for SW Code /Data
• Data/ Code memory up to 128 Kbytes (SRAM)

Memory at SDRAM Interface
• Addressable space up to 32Mbyte (SDRAM only, no SRAM, no DDRAM)
– 16Mbit (1M x 16) Single data rate SDRAM
• Memory Functions:
– PIP/DW, DNR, Scan Conversion, requiring at least 13Mbit
– PIP replay, scalable size

Memory at EBIU Interface for SW Code/Data
• Addressable space up to 8Mbyte
• Memories supported
– 16bit Standard asynchronous ROM, SRAM, FLASH
– 16bit Page mode Flash support (AMD, Intel and ST)
• Memory Functions
– Code memory up to 8Mbyte (FLASH/ROM/RAM)
– Data memory up to 8Mbyte (RAM)

Memory at I^2C Interface
• Software support of external non-volatile memory connected to I^2C interface

Important pins need to be checked in case of troubleshooting

Port	Measure	State	Function
On/Off	pin33 of PL402	low	normal operation
On/Off	pin33 of PL402	high	stand by mode
Mute	pin7 of PL402	low	Audio amplifier is muted
Degauss	pin31 of PL402	low	Degaussing is done
Reset	pin1 of IC316	High	Resets ADOC
Protection	Base of Q719	low	TV set goes to stby mode
LED	pin	high	LED light as red (stby)
LED	pin	low	LED light as green (on)
Supply_switch	pin	high	5V is selected via Q106
Supply_switch	pin	low	V8Stby is selected via Q106

12.10.M24C64WBN6 (IC309)

12.10.1.Features

- Two Wire I 2 C Serial Interface
  Supports 400 kHz Protocol
- 3.3V Supply Voltage
- Write Control Input
- BYTE and PAGE WRITE (up to 32 Bytes)
- RANDOM and SEQUENTIAL READ Modes
- Self-Timed Programming Cycle
- Automatic Address Incrementing
- Enhanced ESD/Latch-Up Behavior
- More than 1M Erase/Write Cycles
- More than 40 Year Data Retention

12.10.2.Description

These I²C -compatible electrically erasable programmable memory (EEPROM) devices are organized as 8192 x 8 (M24C64) .These devices are compatible with the I²C memory protocol. This is a two wire serial interface that uses a bi-directional data bus and serial clock. The devices carry a built-in 4-bit Device Type Identifier code (1010) in accordance with the I²C bus definition.

The device behaves as a slave in the I²C protocol, with all memory operations synchronized by the serial clock. Read and Write operations are initiated by a Start condition, generated by the bus master. The Start condition is followed by a Device Select Code and RW bit, terminated by an acknowledge bit.

When writing data to the memory, the device inserts an acknowledge bit during the 9th bit time, following the bus master's 8-bit transmission. When data is read by the bus master, the bus master acknowledges the receipt of the data byte in the same way. Data transfers are terminated by a Stop condition after an Ack for Write, and after a NoAck for Read.

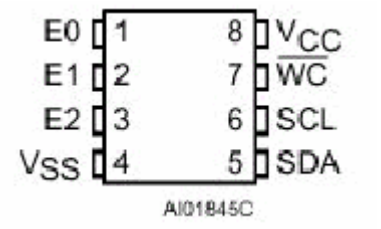

SIGNAL NAMES	
E0, E1, E2	Chip Enable
SDA	Serial Data
SCL	Serial Clock
WC	Write Control
V_{CC}	Supply Voltage
V_{SS}	Ground

12.11.TDA7480L (IC401,IC402)
12.11.1.Description
The TDA7480L is an audio class-D amplifier assembled in Power DIP package specially de-signed for high efficiency applications mainly for TV and Home Stereo sets.

12.11.2.Features
10W Output Power: R_L = 8? /4? ; THD = 10%
High Frequency
No Heatsink
Split Supply
Overvoltage Protection
St-By And Mute Features
Short Circuit Protection
Thermal Overload Protection

12.11.3.Pin Functions
-Vcc=-14.5V
+Vcc=+14.5V

Number	Name	Function
1	$-V_{CC}$	NEGATIVE SUPPLY.
2	$-V_{CC}$	NEGATIVE SUPPLY.
3	$-V_{CC}$	NEGATIVE SUPPLY.
4	OUT	PWM OUTPUT
5	BOOTDIODE	BOOTSTRAP DIODE ANODE
6	BOOT	BOOTSTRAP CAPACITOR
7	NC	NOT CONNECTED
8	FEEDCAP	FEEDBACK INTEGRATING CAPACITANCE
9	FREQUENCY	SETTING FREQUENCY RESISTOR
10	SGN-GND	SIGNAL GROUND
11	IN	INPUT
12	ST-BY-MUTE	ST-BY/ MUTE CONTROL PIN
13	NC	NOT CONNECTED
14	$+V_{CC}$ SIGN	POSITIVE SIGNAL SUPPLY
15	V_{REG}	10V INTERNAL REGULATOR
16	$+V_{CC}$ POW	POSITIVE POWER SUPPLY
17	$-V_{CC}$	NEGATIVE SUPPLY (TO BE CONNECTED TO PIN 16 VIA C5)
18	$-V_{CC}$	NEGATIVE SUPPLY
19	$-V_{CC}$	NEGATIVE SUPPLY
20	$-V_{CC}$	NEGATIVE SUPPLY

12.12.LM7808 (IC803)
12.12.1.Description
The L7800 series of three-terminal positive regulator. These regulators can provide local on-card regulation, eliminating the distribution problems associated with single point regulation. Each type employs internal current limiting, thermal shutdown and safe area protection, making it essentially indestructible. If adequate heat sinking is provided, they can deliver over 1A output current. Although designed primarily as fixed voltage regulators, these devices can be used with external components to obtain adjustable voltages and currents.

12.12.2.Features
Output Current Up To 1.5 A
Output Voltages of 8V
Thermal Over load protection
Short Circuit Protection
Output Transition SOA Protection

12.13.TDA8177F & STV9379FA (IC100)

12.13.1.Description

Designed for monitors and high performance TVs, the STV9379FA&TDA8177F vertical deflection booster can handle flyback voltage up to 70V. More than this it is possible to have a flyback voltage, which is more than the double of the supply (Pin 2). This allows to decrease the power consumption or to decrease the flyback time for a given supply voltage. The TDA8177F operates with supplies up to 35V and provides up to 3APP output current to drive the yoke.

12.13.2.Features

Power Amplifier
Thermal Protection
Output Current Up To 3.0APP
Flyback Voltage Up To 70V (on Pin 5)
Suitable For Dc Coupling Application
External Flyback Supply

12.13.3.Pin connections

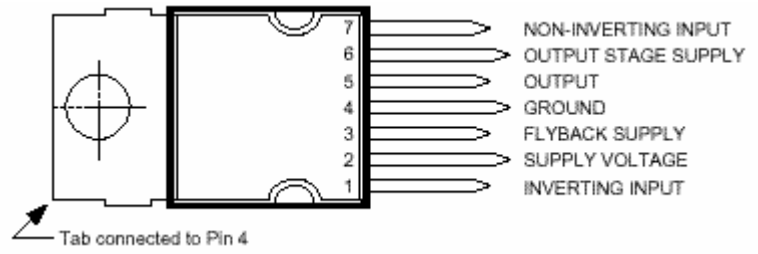

12.13.4.Block Diagram

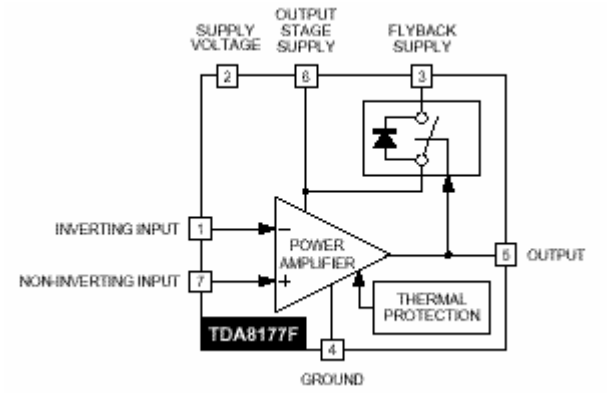

12.14.TCET1102G (IC801)

12.14.1.Description

The TCET110/ TCET2100/ TCET4100 consists of a phototransistor optically coupled to a gallium arsenide infrared-emitting diode in a 4-lead up to 16-lead plastic dual inline package. The elements are mounted on one lead frame using a **coplanar technique**, providing a fixed distance between input and output for highest safety requirements.

12.14.2.Applications

Circuits for safe protective separation against electrical shock according to safety class II (reinforced isolation):
For appl. class I – IV at mains voltage =300 V
For appl. class I – III at mains voltage =600 V
According to VDE 0884, table 2, suitable for: **Switch-mode power supplies, line receiver, computer peripheral interface, microprocessor system interface.**

12.14.3.Features

VDE 0884 related features:

Rated impulse voltage (transient overvoltage) V_{IOTM} = 8 kV peak
Isolation test voltage (partial discharge test voltage) V_{pd} = 1.6 kV
Rated isolation voltage (RMS includes DC) V_{IOWM} = 600 V_{RMS} (848 V peak)
Rated recurring peak voltage (repetitive) V_{IORM} = 600 V_{RMS}

General features:

CTR offered in 9 groups
Isolation materials according to UL94-VO
Pollution degree 2 (DIN/VDE 0110 / resp. IEC 664)
Climatic classification 55/100/21 (IEC 68 part 1)
Special construction: Therefore, extra low coupling capacity of typical 0.2pF, high **C**ommon **M**ode **R**ejection
Low temperature coefficient of CTR
G = Leadform 10.16 mm; provides creepage distance > 8 mm, for TCET2100/ TCET4100 optional; suffix letter 'G' is not marked on the optocoupler
Coupling System U

12.15.MC44608 (IC804)

12.15.1.Description

The MC44608 is a high performance voltage mode controller designed for off–line converters. This high voltage circuit that integrates the start–up current source and the oscillator capacitor, requires few external components while offering a high flexibility and reliability. The device also features a very high efficiency stand–by management consisting of an effective Pulsed Mode operation. This technique enables the reduction of the stand–by power consumption to approximately 1W while delivering 300mW in a 150W SMPS.

• Integrated Start–Up Current Source
• Lossless Off–Line Start–Up
• Direct Off–Line Operation
• Fast Start–Up

12.15.2.General Features

• Flexibility
• Duty Cycle Control
• Under voltage Lockout with Hysteresis
• On Chip Oscillator Switching Frequency 40, or 75kHz
• Secondary Control with Few External Components

Protections

• Maximum Duty Cycle Limitation
• Cycle by Cycle Current Limitation
• Demagnetization (Zero Current Detection) Protection
• “Over VCC Protection” Against Open Loop
• Programmable Low Inertia Over Voltage Protection Against Open Loop
• Internal Thermal Protection

GreenLine™ Controller

• Pulsed Mode Techniques for a Very High Efficiency Low Power Mode
• Lossless Startup
• Low dV/dT for Low EMI Radiations

12.15.3.Pin Connections

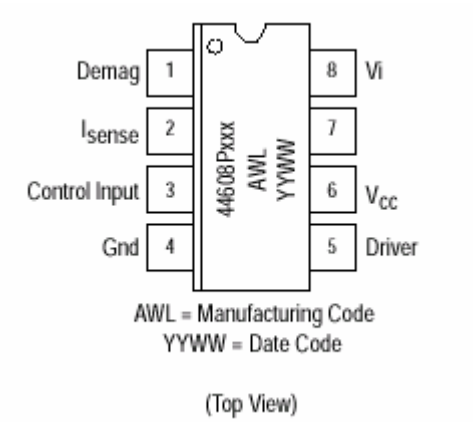

12.15.4.Pin Function description

PIN	NAME	DESCRIPTION
1	Demag	The Demag pin offers 3 different functions: Zero voltage crossing detection (50mV), 24mA current detection and 120mA current detection. The 24mA level is used to detect the secondary reconfiguration status and the 120mA level to detect an Over Voltage status called Quick OVP.
2	ISENSE	The Current Sense pin senses the voltage developed on the series resistor inserted in the source of the power MOSFET. When I sense reaches 1V, the Driver output (pin 5) is disabled. This is known as the Over Current Protection function. A 200mA current source is flowing out of the pin 3 during the start–up phase and during the switching phase in case of the Pulsed Mode of operation. A resistor can be inserted between the sense resistor and the pin 3; thus a programmable peak current detection can be performed during the SMPS stand–by mode.
3	Control Input	A feedback current from the secondary side of the SMPS via the opto–coupler is injected into this pin. A resistor can be connected between this pin and GND to allow the programming of the Burst duty cycle during the Stand–by mode.
4	Ground	This pin is the ground of the primary side of the SMPS.
5	Driver	The current and slew rate capability of this pin are suited to drive Power MOSFETs.
6	V_{CC}	This pin is the positive supply of the IC. The driver output gets disabled when the voltage becomes higher than 15V and the operating range is between 6.6V and 13V. An intermediate voltage level of 10V creates a disabling condition called Latched Off phase.
7		This pin is to provide isolation between the V_i pin 8 and the V_{CC} pin 6.
8	V_i	This pin can be directly connected to a 500V voltage source for start–up function of the IC. During the Start–up phase a 9 mA current source is internally delivered to the V_{CC} pin 6 allowing a rapid charge of the V_{CC} capacitor. As soon as the IC starts–up, this current source is disabled.

12.16.TL431 (Q816)

12.16.1.Description

The TL431 is a 3-terminal adjustable shunt voltage regulator providing a highly accurate 1 % band gap reference. TL431 acts as an open-loop error amplifier with a 2.5V temperature compensation reference. The TL431 thermal stability, wide operating current (150mA) and temperature range (0.to 105.makes it suitable for all variety of application that are looking for a low cost solution with high performance. The output voltage may be adjusted to any value between VREF and 36 volts with two external resistors. The TL431 is operating in full industrial temperature range of 0°C to 105°C.

12.16.2.Features

• Trimmed Band gap to 1%
• Wide Operating Current 1mA to 150mA
• Extended Temperature Range 0 °C to 105°C

12.16.3.Pin Configurations

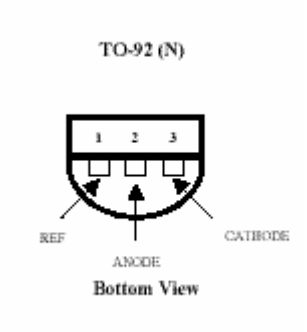

bottom view

12.17.TFMS5360

Is located on front boards (keyboards) of the TV set

12.17.1.Description

The TFMS5360 is a miniature receiver for infrared remote control systems.

12.17.2.Features

• Photo detector and preamplifier in one.
• 36 KHZ
• Pin diode and preamp
• IR filter.

13.AK53 CHASSIS MANUAL ADJUSTMENTS PROCEDURE

13.1.PRELIMINARY

Before starting with the alignment procedure, make sure that all the potentiometers on the chassis and also screen and focus pots are in the medium position.

13.2.SYSTEM VOLTAGE ADJUSTMENTS

Inputs	AC power (220V 50Hz) PAL B/G test pattern via RF (PAL I test pattern for PAL I TV's, SECAM D/K pattern, SECAM L/L'/K' TVs.)
Outputs	Digital voltmeter to anode of D805
Display	System voltage
Action	Apply power. Check that the stand-by Led lights. Select TV mode and tune to the applied test pattern via local test keyboard. Chassis should start normally. Adjust all analog controls (volume, bass, treble, brightness, contrast, colour) to minimum settings. Adjust VR801 according to the following different type of CRTs.

SYSTEM VOLTAGE(B+)	TYPE OF CRT
135V±0.5V measured @anode of D805	THOMSON 28' 4:3 SF *A66EHJ13X12*

13.3.AFC ADJUSTMENTS

AFC is automatically adjusted from software .

13.4.FOCUS ADJUSTMENTS

Inputs	AC power PAL B/G test pattern via RF input.
Outputs	Picture tube drive.
Display	Picture
Action	Select TV mode and tune to the signal. Adjust focus potantiometer (the upper pot on the rear side of the FBT transformer) for optimum focusing drive.

13.5.SCREEN ADJUSTMENT (VG2 ALIGNMENT)

To adjust the screen of the TV set please follow the following steps;

Step1: Go to service menu by ;
-Press MENU button from remote controller
-Enter 4,7,2,5 from digit keys of remote controller
-You will see 7 items of SERVICE MAIN MENU
Step2:Go to VG2 STATUS item by ?/? buttons and press OK button from remote controller
Step3:In that case screen will be blanked and you will see one of four items as remark on the screen UNKNOWN,INCREASE,DECREASE and OK.
Step4:If you see UNKNOWN, INCREASE, DECREASE then rotate the screen port of FBT until you see OK indication on the screen that means that Screen of TV set properly.

13.6.AGC (AUTOMATIC GAIN CONTROL)

In order to do AGC adjustment, enter a **60µdBV** RF signal level from channel A-12 (205.25 MHz) Select AGC EXT parameter from service menu. Set AGC parameter to zero. Note the tuner AGC voltage level. Increase AGC value until tuner AGC voltage goes 1V below noted voltage level. Check that picture is normal at 90dBµV signal level.

Min. Value:	000
Max. Value:	063

14.AK53 CHASSIS PRODUCTION SERVICE MODE ADJUSTMENTS

All system, geometry and white balance alignments are performed in production service mode. Before starting the production mode alignments, make sure that all manual adjustments are done correctly. To start production mode alignments enter the MAIN MENU and then press the digits **4, 7, 2** and **5** respectively. The following first menu appears on the screen. The entire service menu parameters of AK53 CHASSIS are listed below.

SERVICE MENU	
1	VG2 STATUS
2	OPTIONS
3	GEOMETRY
4	VIDEO
5	SOUND
6	FACTORY

You can go to the items in Service Menu by pressing "? /? " buttons. Selected parameter will be highlighted. In order to enter the selected parameter except VG2 STATUS, press "? " button. VG2 STATUS is entered by pressing "**OK**" button. In order to change the selected parameter, use "? /? " buttons. To exit the service menu press "**M**" button.

14.1.OPTIONS

Select **Options** in Service menu by pressing "? /? " buttons and press "? " button to enter **Options** menu. The following menu appears on the screen.

	OPTIONS	
1	TILT OPTION	ON/OFF
2	S-VHS	ON/OFF
3	FRONT AV	ON/OFF
4	EXT-3	ON/OFF
5	BG	ON/OFF
6	DK	ON/OFF
7	L-LP	ON/OFF
8	I	ON/OFF
9	M	ON/OFF
10	TXT LAST PAGE	ON/OFF
11	CRT	4:3/16:9
12	AUTOSTORE	ON/OFF
13	P. SMART OPTION	1/2
14	POWER ON	DIRECT/ST-BY

TILT OPTION

It is used for rotation adjustments of Real Flat (RF) tubes. If it is set to ON TILT option is seen in Picture menu. It is set to OFF for Super Flat (SF) tubes.

S-VHS

If S-VHS is set as ON this string is seen as AV source and also in user menu items.

FRONT-AV

If FRONT-AV is set as ON this string is seen as AV source and also in user menu items.

EXT-3

If EXT-3 is set as ON this string is seen as AV source and also in user menu items.

BG

For standard BG, select ON other case select OFF.

DK
For standard DK, select ON other case select OFF.

L-LP
For standard L-LP, select ON other case select OFF.

I
For standard I, select ON other case select OFF.

M
For standard M, select ON other case select OFF. Set to OFF.

TXT LAST PAGE
Text last page can be changed to ON or OFF. If this parameter is selected as ON, while teletext page is exited and entered again in the same TV channel, last visited teletext page comes to the screen. Set to ON.

CRT
CRT option can be changed as 4:3 or 16:9 according to picture tube.

AUTOSTORE
Autostore option can be set to ON or OFF. If it is set to ON, Volume level and picture modes are stored automatically. Set to OFF for MEDION.

P.SMART OPTION
Picture Smart option can be set as 1 or 2. It will be set to 1 for MEDION.

POWER ON
It can be change between DIRECT or ST-BY. If DIRECT is selected TV starts directly whenever it switched off, if ST-BY is selected TV always waits in stand-by mode until RC or front panel keys are pressed. It will be set to ST-BY for MEDION.

14.2.GEOMETRY
Select **Geometry** in Service main menu by pressing "? /? " buttons and press "? " button to enter **Geometry** menu. The following menu appears on the screen.

GEOMETRY			
		28" 4:3 SF	**32" 16:9 SF**
1	EW ALIGNMENT	?	?
2	V_SHIFT	34	41
3	SERVICE BLANK	OFF	OFF
4	VERT_AMP	28	34
5	UPPER LIN.	33	33
6	LOWER LIN.	94	94
7	VERT_S_CORR.	72	72
8	HOR SHIFT	94	116
9	HOR LINEARITY	141	153
10	HOR S CORR	49	69
11	HOR INNER PINC	32	33
12	HOR PAR	62	60
13	HOR BOW	64	60
14	TILT	-	-
15	PIP POSITIONS	?	?

.

14.2.1.EW ALIGNMENT
Select **Ew Alignment** in Geometry menu by pressing "? /? " buttons and press "? " button to enter **Ew Alignment** menu. The following menu appears on the screen.

EW ALIGNMENT			
		28" 4:3 SF	**32" 16:9 SF**
1	EW_WIDTH	226	190
2	EW PARABOLA	57	108
3	EW TRAPEZIUM	24	20
4	EW UPPER CORNER	24	45
5	EW LOWER CORNER	24	45
6	EW_WAVE_1	95	110
7	EW_WAVE_2	141	153
8	EW_WAVE_3	176	192
9	EW_WAVE_4	199	221
10	EW_WAVE_5	210	236
11	EW_WAVE_6	207	234
12	EW_WAVE_7	191	215
13	EW_WAVE_8	163	184
14	EW_WAVE_9	126	140
15	EW_WAVE_10	82	100

To make East-West corrections first use;
-EW_WIDTH
-EW PARABOLA
-EW TRAPEZIUM
-EW UPPER CORNER
-EW LOWER CORNER

Then still needs to be a fine tuning use EW_WAVE_1…10.

EW_WIDTH
It can be adjusted between 0 … 254.

EW PARABOLA
It can be adjusted between 0 … 127.

EW TRAPEZIUM
It can be adjusted between 0 … 48.

EW UPPER CORNER
It can be adjusted between 0 … 48.

EW LOWER CORNER
It can be adjusted between 0 … 48.

*Following 10 EW adjustment parameters make geometry corrections if fine tuning is necessary in geometry, each one of 10 parameter is responsible for each different dedicated area as seen below.

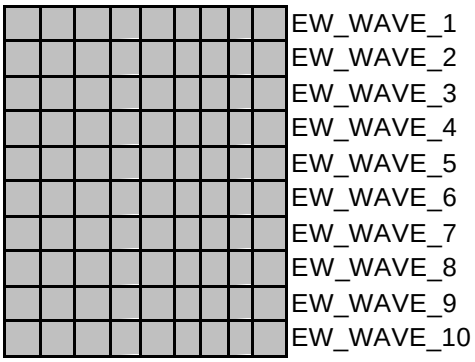

EW_WAVE_1
It can be adjusted between 0 … 255.

EW_WAVE_2
It can be adjusted between 0 … 255.

EW_WAVE_3
It can be adjusted between 0 … 255.

EW_WAVE_4
It can be adjusted between 0 … 255.

EW_WAVE_5
It can be adjusted between 0 … 255.

EW_WAVE_6
It can be adjusted between 0 … 255.

EW_WAVE_7
It can be adjusted between 0 … 255.

EW_WAVE_8
It can be adjusted between 0 … 255.

EW_WAVE_9
It can be adjusted between 0 … 255.

EW_WAVE_10
It can be adjusted between 0 … 255.

PICTURE FORMATS
4:3 TV MODES

4:3 MODE

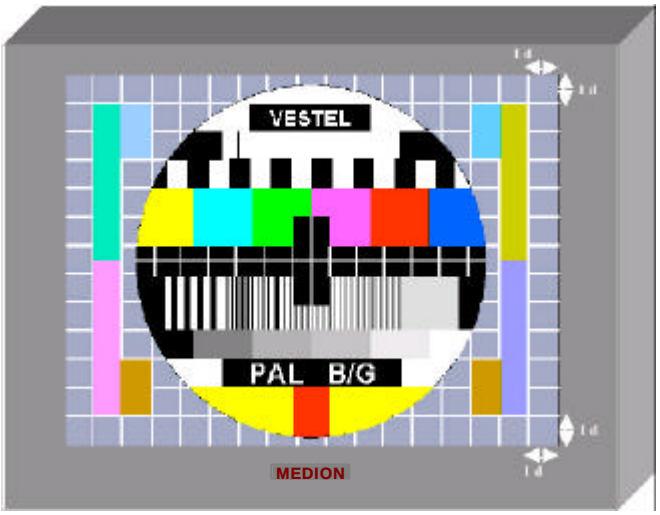

16:9 MODE

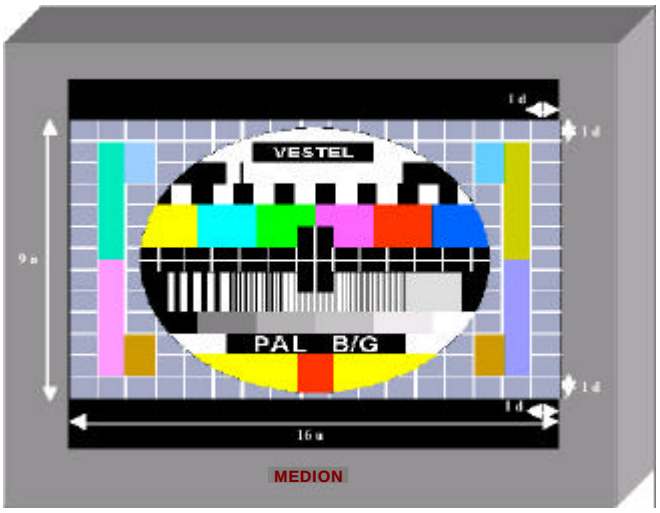

16:9 TV MODES

NORMAL MODE:

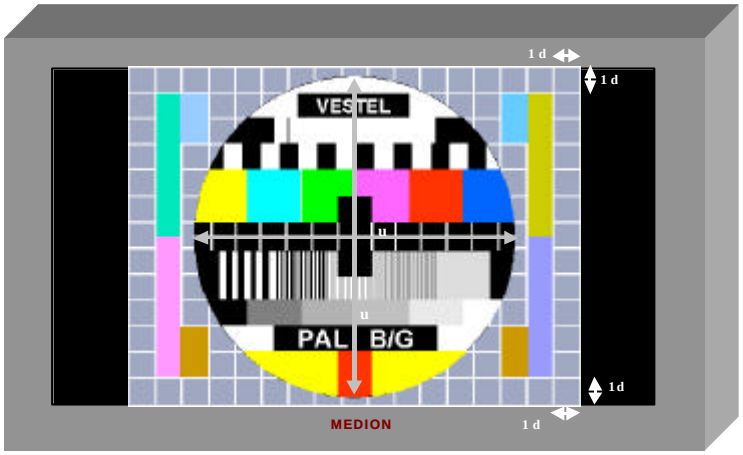

14:9 MODE:

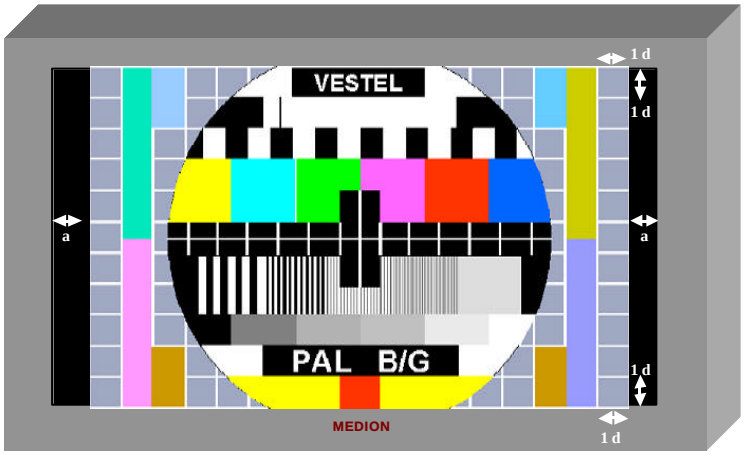

SUBTITLE MODE:

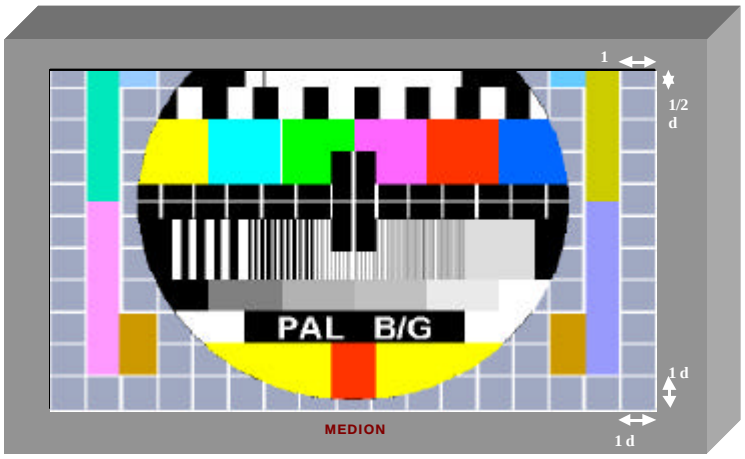

CINEMA MODE:

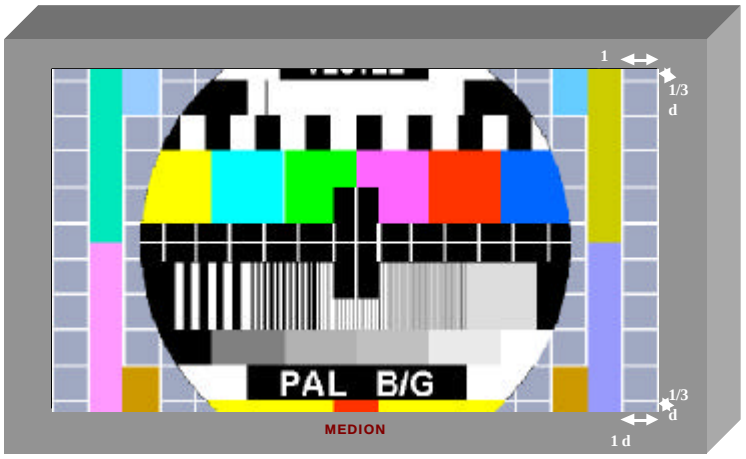

FULL MODE:

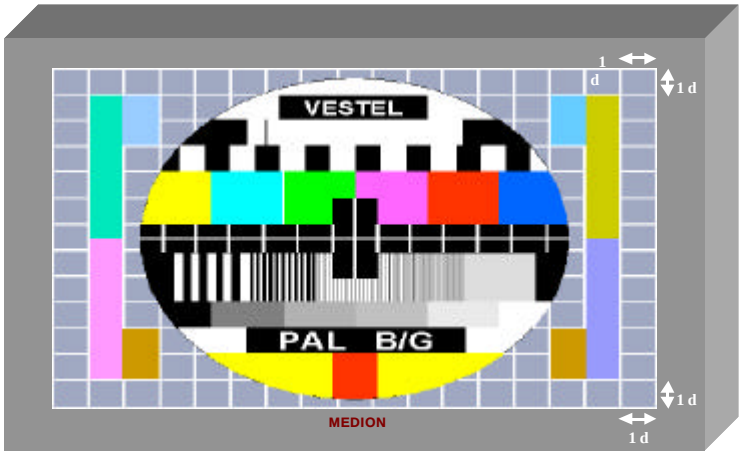

PANORAMA MODE:

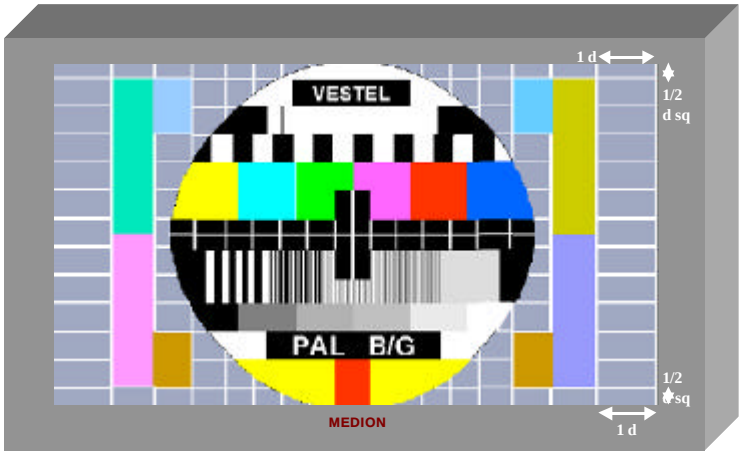

ZOOM MODE:

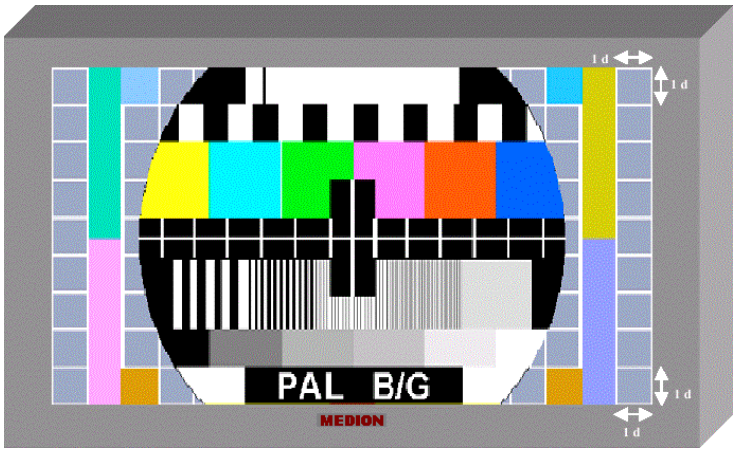

V_SHIFT
Apply a circle test pattern via RF, change Vertical Shift by pressing "? /? " buttons till the test pattern is vertically centered. Horizontal line at the center of the test pattern is in equal distance both to upper and lower side of the picture tube. Check and readjust V_SHIFT item if the adjustment becomes improper after some other geometric adjustments are done.
It can be adjusted between 0 … 63.

SERVICE BLANK
It is set ON to make vertical shift correctly centered. After adjustment of vertical shift, it is set as OFF to unblank half screen of the picture.

VERT_AMP
Apply a circle test pattern via RF, change Vertical Amplitude by pressing "? /? " buttons till horizontal black lines on both the upper and lower part of the test pattern become very close to the upper and lower horizontal sides of picture tube and nearly about to disappear. Check and readjust VERT_AMP item if the adjustment becomes improper after some other geometric adjustments are done.
It can be adjusted between 0 … 63.

UPPER LIN.
Change Upper Linearity by pressing "? /? " buttons till all the size of squares of the test pattern become in equal size from the top of the screen to its bottom of the whole screen. Check and readjust UPPER LIN. item if the adjustment becomes improper after some other geometric adjustments are done. (especially after than VERT_S_CORR. adjustment)
It can be adjusted between 0 … 126.

LOWER LIN.
Change Lower Linearity by pressing "? /? " buttons till all the size of squares of the test pattern become in equal size from the top of the screen to its bottom of the whole screen. Check and readjust LOWER LIN. item if the adjustment becomes improper after some other geometric adjustments are done. It can be adjusted between 0 …126.

VERT_S_CORR.
Change Vertical S-Correction by pressing "? /? " buttons till the size of squares on both the upper and lower part of test pattern become equal to the squares laying on the vertical center of the test pattern. Check and readjust VERT_S_CORR. item if the adjustment becomes improper after some other geometric adjustments are done.
It can be adjusted between 0 … 126.

HOR SHIFT
Change Horizontal Shift by pressing "? /? " buttons till the the test pattern is horizontally in equal distance both to right and left sides of the picture tube. Check and readjust HOR SHIFT item if the adjustment becomes improper after some other geometric adjustments are done.
It can be adjusted between 0 … 255.

HOR LINEARITY
Change Horizontal Linearity by pressing "? /? " buttons till all the size of squares of the test pattern become in equal size from the top of the screen to its bottom of the whole screen. Check and readjust HOR LINEARITY item if the adjustment becomes improper after some other geometric adjustments are done. (especially after than HOR S CORR adjustment)
It can be adjusted between 0 … 255.

HOR S CORR
Change Horizontal S Correction by pressing Left/Right buttons till the size of squares on both the upper and lower part of test pattern become equal to the squares laying on the vertical center of the test pattern. Check and readjust HOR S CORR item if the adjustment becomes improper after some other geometric adjustments are done.
It can be adjusted between 0 … 127.

HOR INNER PINC
Apply cross hatch pattern; try to improve bendings towards tube as straight by changing this parameter (Horizontal pincushion).
It can be adjusted between 0 … 32.

HOR PAR
Change Horizontal Parabola by pressing "? /? " buttons till vertical lines close to the both sides of the picture frame become parallel to vertical sides of picture tube without any bending to left or to right side of the screen. Check and readjust HOR PAR item if the adjustment becomes improper after some other geometric adjustments are done.
It can be adjusted between 0 … 126.

HOR BOW
Change Horizontal Bow by pressing "? /? " buttons till the vertical lines especially ones close to the left and right sides will of equal and symmetrical bending, i.e. they together will neither be towards left side nor right side. Check and readjust HOR BOW item if the adjustment becomes improper after some other geometric adjustments are done. It can be adjusted between 0 …126.

TILT
Apply cross hatch pattern and look carefully top and button of the screen and try to make in parallel to tube with the lines by playing this parameter (This feature is given most of the time with real flat tubes)

PIP POSITIONS

PIP POSITIONS		
1	PIP POS X1	029
2	PIP POS X2	159
3	PIP POS Y1	035
4	PIP POS Y2	142

The values of X1, X2, Y1, Y2 coordinates the PIP position.

	X1	X2
Y1	(X1, Y1)	(X2, Y1)
Y2	(X1, Y2)	(X2, Y2)

14.3.VIDEO ALIGNMENTS

Select Video in Service menu by pressing ‘? /? ” buttons and press ‘? ” button to enter Video menu. The following menu appears on the screen.

VIDEO			
		28” 4:3 SF	**32” 16:9 SF**
1	MAIN AGC	34	26
2	PIP AGC	16	16
3	VIDEO ADJUST	✍	✍
4	COLOR ADJUSTMENT	✍	✍
5	IF_PLL_F_F	NORMAL	NORMAL
6	IF_PLL_OFF_NEG	36	36
7	IF_PLL_OFF_POS	36	36
8	OSD CONTRAST	80	80
9	TELETEXT CONTRAST	70	70
10	TXT HOR SHIFT	5	3
11	PAT HOR SHIFT	5	3
12	FLASH PROTECT	OFF	OFF

RED ONES ARE NOT RECOMMENDED TO CHANGE

MAIN AGC:
Is used to change the AGC voltage. Range 0…63

PIP AGC:
Is used to change the AGC of 2nd voltage. Range 0…63

14.3.1.VIDEO ADJUST

Select Video adjust in Video menu by pressing ‘? /? ” buttons and press ‘? ” button to enter Video Adjust menu. The following menu appears on the screen.

VIDEO ADJUST		
1	WHITE DRIVE	✍
2	MIN BRIGHTNESS	0
3	MIN CONTRAST	25
4	WHITE POINT R	128
5	WHITE POINT G	128
6	WHITE POINT B	128

14.3.1.1.WHITE DRIVE
Select White Drive in Video Adjust menu by pressing "? /? " buttons and press "? " button to enter White Drive menu. The following menu appears on the screen.

	WHITE DRIVE	
1	NORMAL	✍
2	WARM	✍
3	COOL	✍

14.3.1.1.1.NORMAL
Select Normal in White Drive menu by pressing "? /? " buttons and press "? " button to enter Normal menu. The following menu appears on the screen.

	NORMAL		
		28" 4:3 SF	**32" 16:9 SF**
1	RED NORMAL	156	176
2	GREEN NORMAL	152	165
3	BLUE NORMAL	150	155

14.3.1.1.2.WARM
Select Warm in White Drive menu by pressing "? /? " buttons and press "? " button to enter Warm menu. The following menu appears on the screen.

	WARM		
		28" 4:3 SF	**32" 16:9 SF**
1	RED WARM	171	194
2	GREEN WARM	152	165
3	BLUE WARM	150	155

14.3.1.1.3.COOL
Select Cool in White Drive menu by pressing "? /? " buttons and press "? " button to enter Cool menu. The following menu appears on the screen.

	COOL		
		28" 4:3 SF	**32" 16:9 SF**
1	RED COOL	152	180
2	GREEN COOL	145	164
3	BLUE COOL	160	170

14.3.1.2.MIN BRIGHTNESS
It is not recommended to change.

14.3.1.3.MIN CONTRAST
It is not recommended to change.

14.3.1.4.WHITE BALANCE ADJUSTMENT
Apply WHITE test pattern via RF. Adjust brightness, contrast to maximum from picture menu. And then set the tint from picture menu according to which white drive adjustment is going to be done and then try to reach specified values by changing Normal/Cool or Warm. (has range 0…255)

14.3.2.COLOR ADJUSTMENT

Select Color Adjustment in Video menu by pressing "? /? " buttons and press "? " button to enter Color Adjustment menu. The following menu appears on the screen.

COLOR ADJUSTMENT		
1	Y DEL SEC BG	4
2	Y DEL SEC DK	4
3	Y DEL SEC L	4
4	Y DEL SEC AV	4
5	Y DEL PAL BG	0
6	Y DEL PAL DK	0
7	Y DEL PAL I	0
8	Y DEL PAL M	0
9	Y DEL PAL AV	0
10	VIDDEC QTHR	9
11	VIDDEC STHR	9

14.3.2.1.Y DEL SEC BG, Y DEL SEC DK, Y DEL SEC L, Y DEL SEC AV:

They are used to adjust Y-Delay for Secam till the color transients on the color bar of the pattern become as sharper and colors between transients do not mix with each other as possible.
For other standards no need to adjust is done automatically within SW.

14.3.2.2.Y DEL PAL BG, Y DEL PAL DK, Y DEL PAL I, Y DEL PAL M, Y DEL PAL AV:

They are used to adjust Y-Delay for Pal till the color transients on the color bar of the pattern become as sharper and colors between transients do not mix with each other as possible.
For other standards no need to adjust is done automatically within SW.

14.3.2.3.VIDDEC QTHR, VIDDEC STHR

They are not recommended to change.

IF_PLL_F_F, IF_PLL_OFF_NEG, IF_PLL_OFF_POS

They are not recommended to change.

OSD CONTRAST, TELETEXT CONTRAST

They are not recommended to change.

TXT HOR SHIFT, PAT HOR SHIFT, FLASH PROTECT

They are not recommended to change.

14.4.SOUND RELATED OPTIONS

Select Sound in Service main menu by pressing "? /? " buttons and press "? " button to enter Sound menu. The following menu appears on the screen.

SOUND		
1	NICAM I PRESCALE	31
2	SUBWOOFER	ON/OFF
3	HEADPHONE	ON/OFF
4	LINE OUTPUT	ON/OFF
	LOUDNESS	ON/OFF

NICAM I PRESCALE

Is used to adjust power outputs for NICAM I standards, for other standards and scart no prescale value is needed, those are automatically adjusted within SW.

SUBWOOFER

If in the product subwoofer feature is available select as ON. Otherwise select as OFF.

HEADPHONE

If it is selected as ON, headphone menu appears in the Sound menu, otherwise does not.

LINE OUTPUT

If Line Output is supported by TV set then set this item as ON. Otherwise OFF is selected. (This feature is used to use external audio power amplifiers.)

LOUDNESS

If Loudness is supported by TV set then set this item as ON. Otherwise OFF is selected.

14.5.FACTORY SETTINGS

Select Factory in Service main menu by pressing "? /? " buttons and press "? " button to enter Factory menu. The following menu appears on the screen.

	FACTORY	
1	BRIGHTNESS	50
2	CONTRAST	75
3	COLOR	40
4	SHARPNESS	63
5	VOLUME	10
6	HP VOLUME	50
7	AVL	OFF
8	SUBWOOFER	OFF
9	BLUE SCREEN	OFF
10	TURBO SOUND	OFF
11	PICTURE SMART	PERSONAL
12	WHITE DRIVE	NORMAL
13	DNR	MEDIUM
14	LANGUAGE	GERMAN
15	COUNTRY	DENMARK
16	TXT LANGUAGE	WEST EUROPE
17	EXT2 OUTPUT	TV
18	LINE OUTPUT	TV
19	RC STANDARD	ON
20	RC SHARP	OFF
21	RC TOSHIBA	OFF
22	APS	OFF

These values may change upon customer request.

15.MENU LANGUAGES

MENU LANGUAGES	APS COUNTRY	PICTURE MODES
ENGLISH-	BELGIUM	**4:3 CRT**
FRANÇAIS	DENMARK	AUTO
DEUTSCH	FINLAND	4/3
GREEK--? ? ? ?? ?? ?	FRANCE	16/9
HUNGARIAN--MAGYAR	GERMANY	
SWEDISH--SVENSKA	GREECE	**16:9 CRT**
SPANISH--ESPA?OL	IRELAND	AUTO
SLOVENIAN--SLOVENSKI	ITALY	NORMAL
RUSSIAN--? ? ? ? ? ? ?	NETHERLANDS	FULL
ROMENIAN--ROMÂN	NORWAY	14:9
PORTUGUESE--PORTUGUÊS	PORTUGAL	CINEMA
POLISH--POLSKI	SLOVENIA	PANORAMA
ITALIANO--ITALIANO	SPAIN	SUBTITLE
NORVEGIAN--NORSK	SWEDEN	
FINNISH--SUOMI	SWITZERLAND	
DANISH--DANSK	UK	
SLOVAKIAN--SLOVENSKÝ	ROMANIA	
UKRAINIAN--? ? ? ? ? ? ? ?		
TURKISH--TÜRKÇE		
CZECH--C? ? ? Y		
CROATIAN--HRVATSKI		
BULGARIAN--? ? ? ? ? ? ?		
DUTCH--NEDERLANDS		

TEXT LANGUAGE GROUPS	WEST EURPOE	EAST EUROPE	GREEK-TURKEY	RUSSIAN
ENGLISH	X		X	
FRENCH	X	X	X	
SCAND--SWEDISH--FINNISH--DANISH	X	X	X	
CZECH--SLOVAK	X	X		X
GERMAN--DUTCH--FLEMISH	X	X	X	X
SPANISH--PORTUGUESE	X		X	
ITALIAN	X	X	X	
ARABIC				
HUNGARIAN	X	X	X	
POLISH		X		
TURKISH			X	
GREEK			X	
ICELANDIC	X		X	
RUSSIAN				X
BYELO--RUSSIAN				X
SLOVENIAN	X			
LITHUANIAN				X
LETTISH				X
UKRANIAN				X
RUMANIAN	X			
NORWEGIAN	X			
BULGARIAN				X
CORATIAN				X
HEBREW				

16.BLOCK DIAGRAM

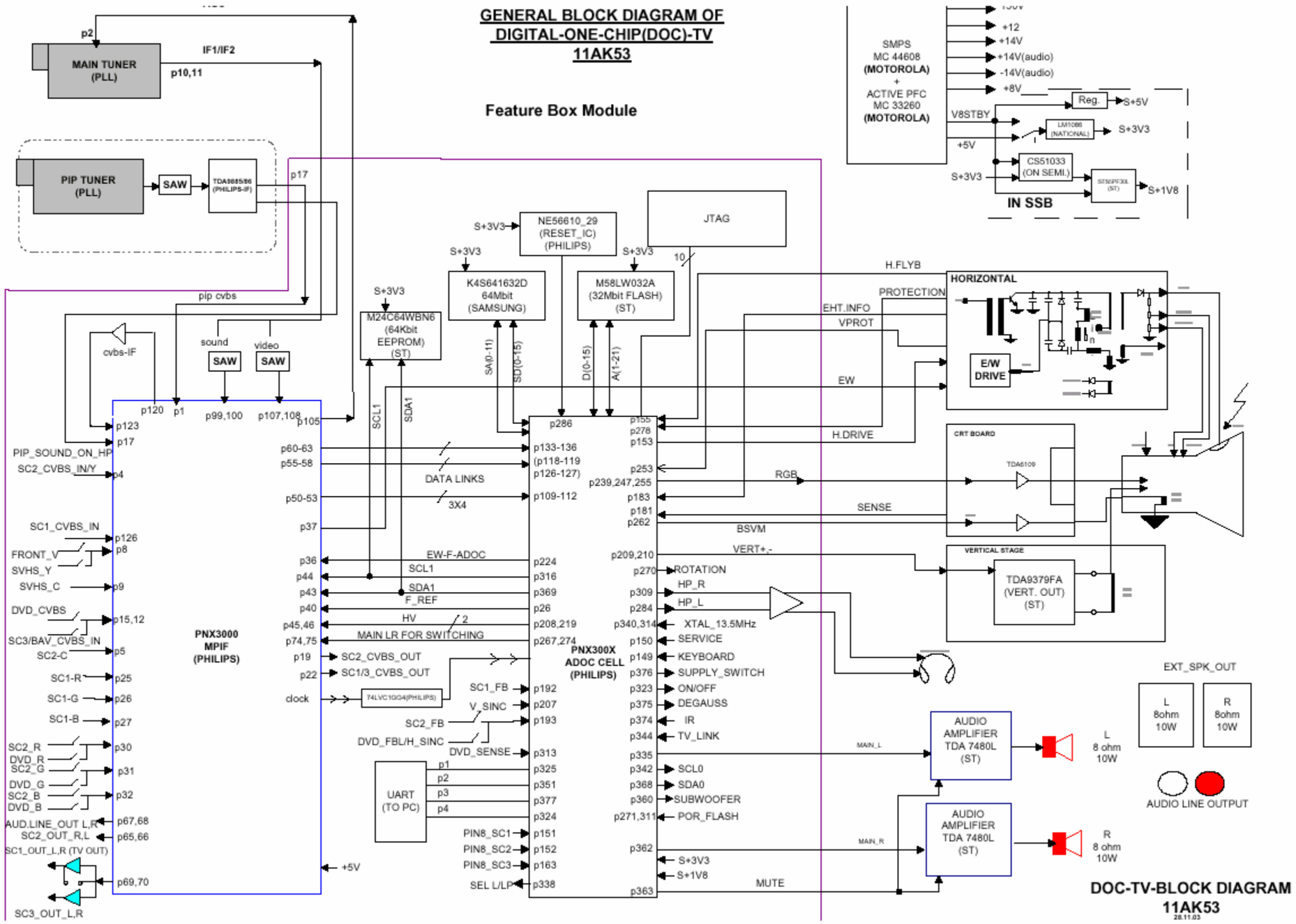

17.CIRCUIT DIAGRAMS

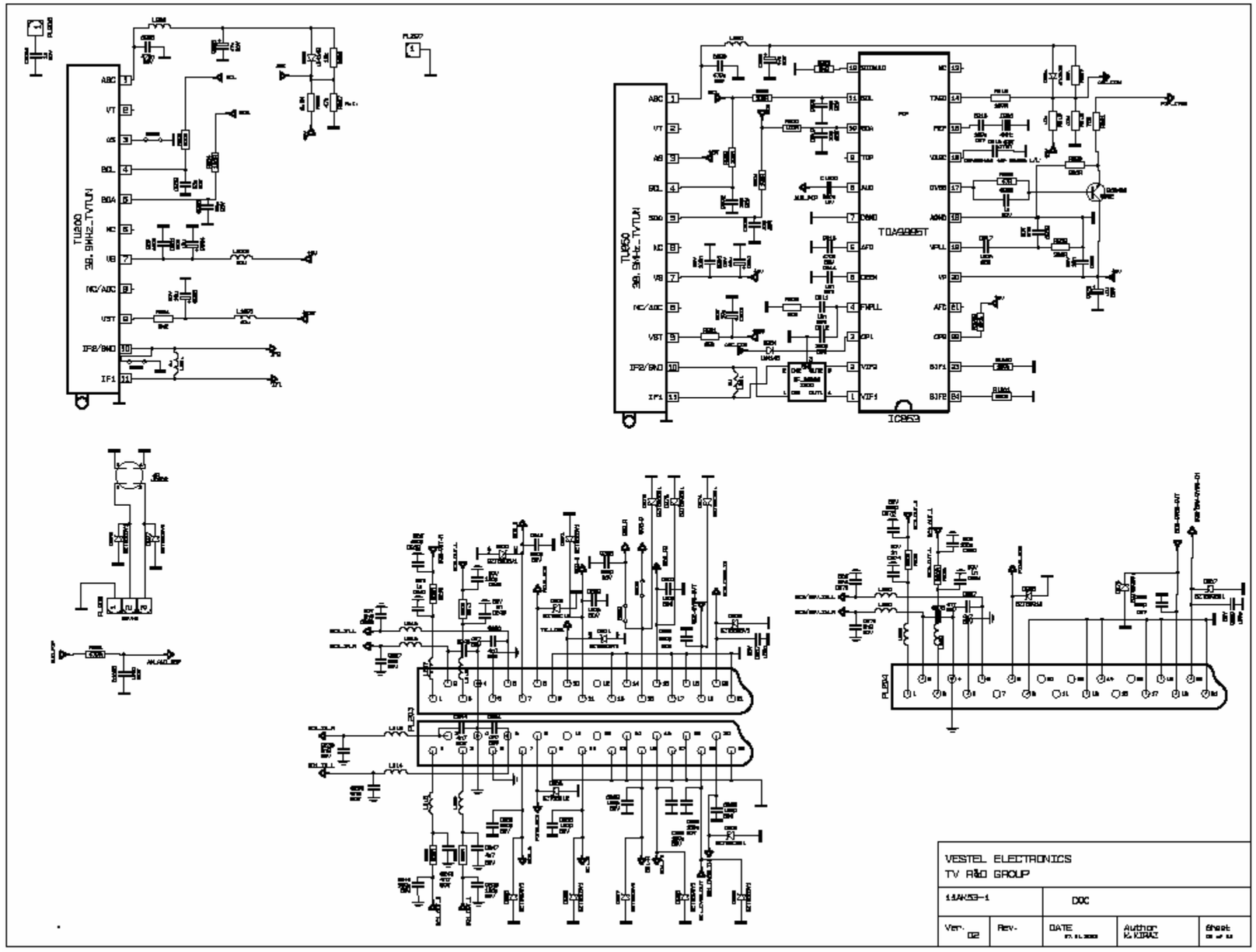

11AK53-1 (SMALL SIGNAL)

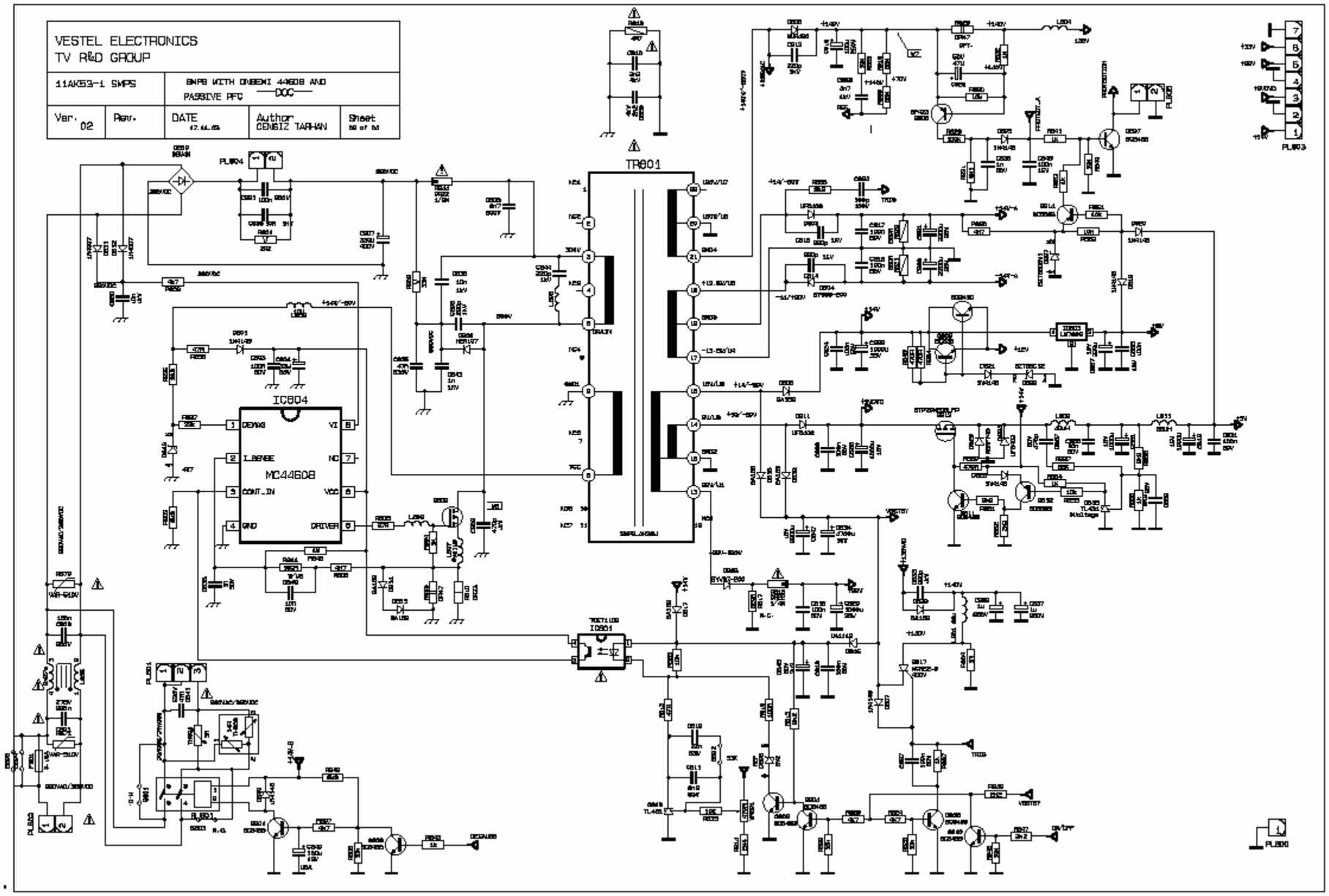

11AK53-2 (SMPS)

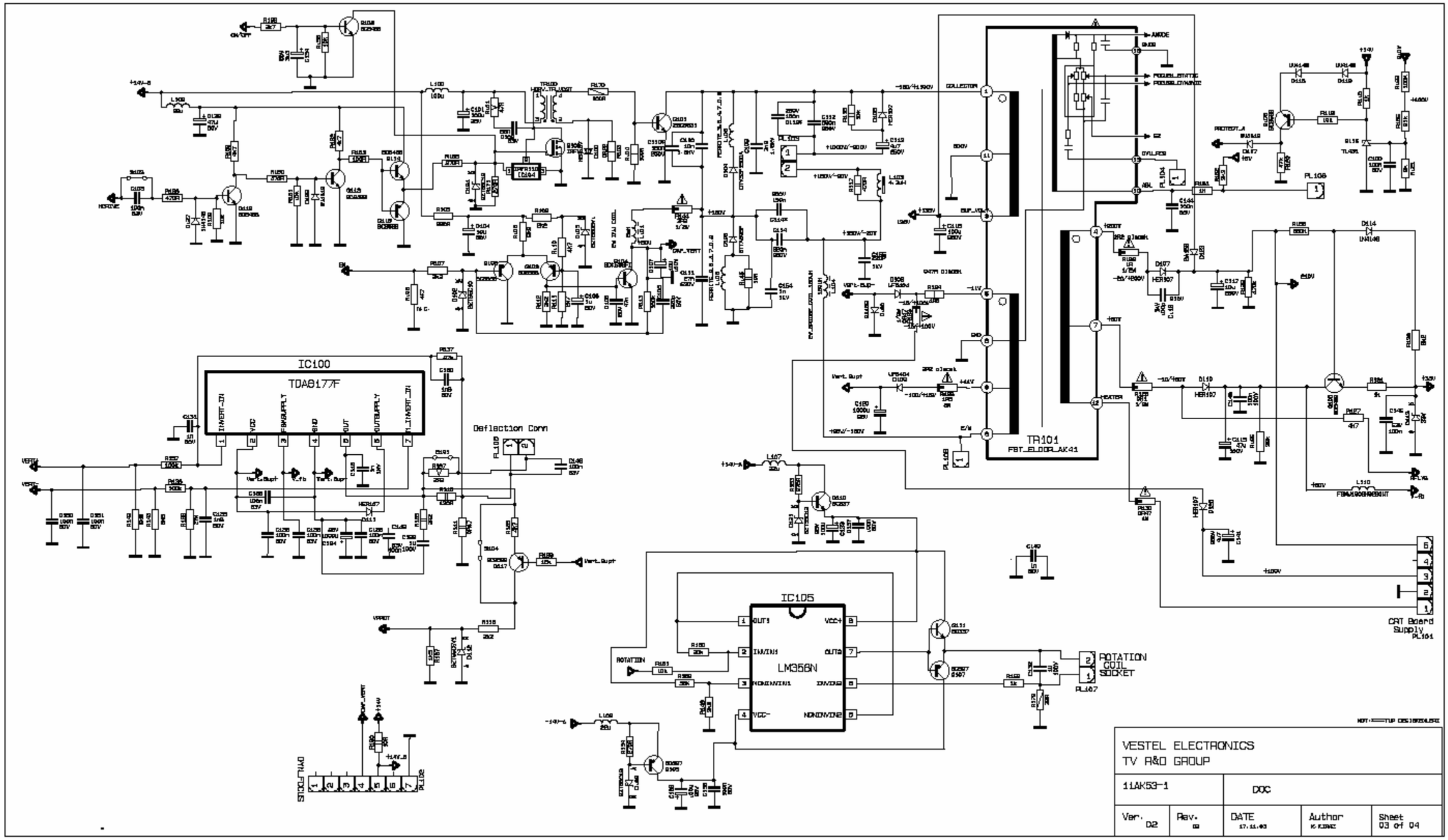

11AK53-3 (DEFLECTION)

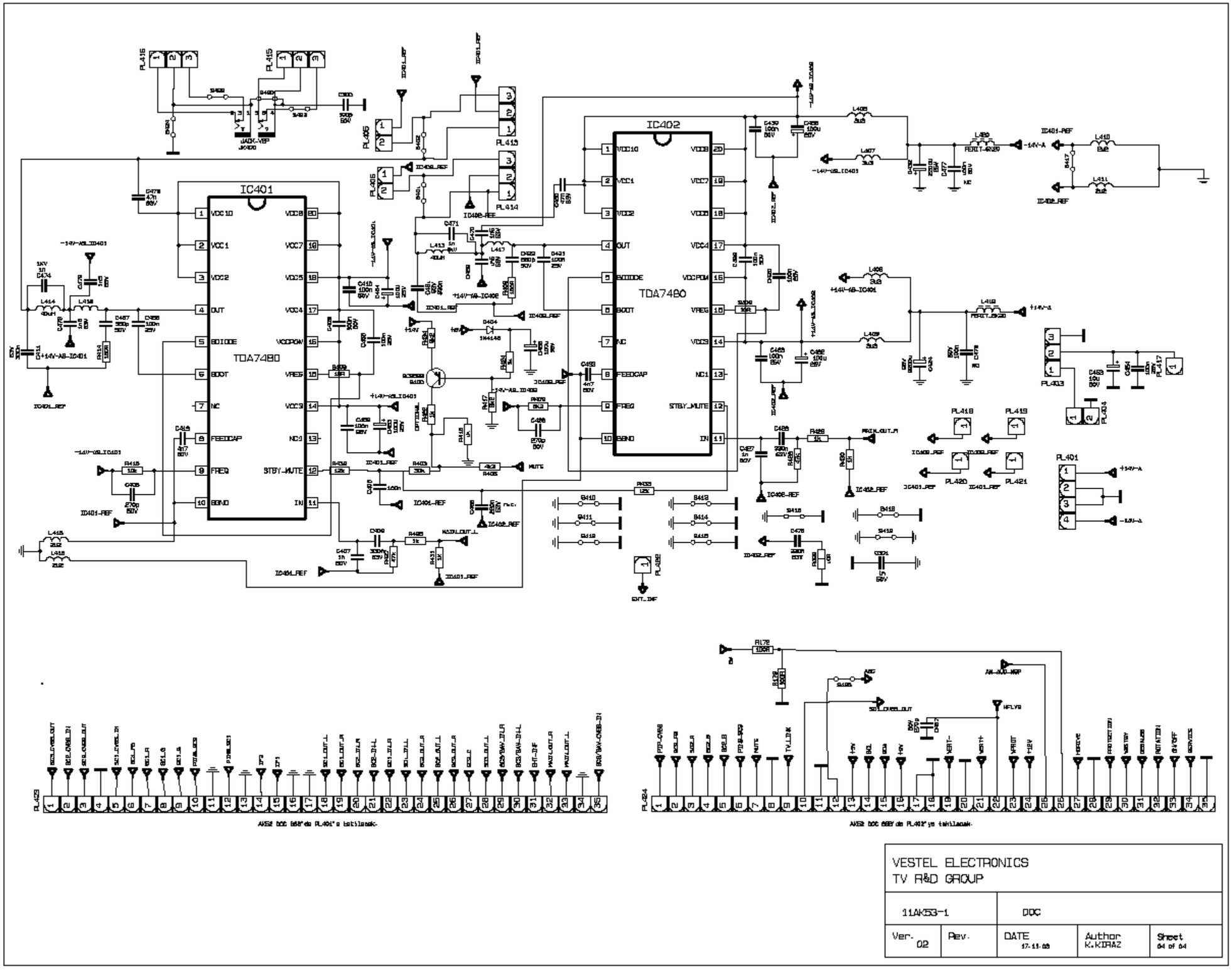

11AK53-4 (AUDIO POWER AMPLIFIER)

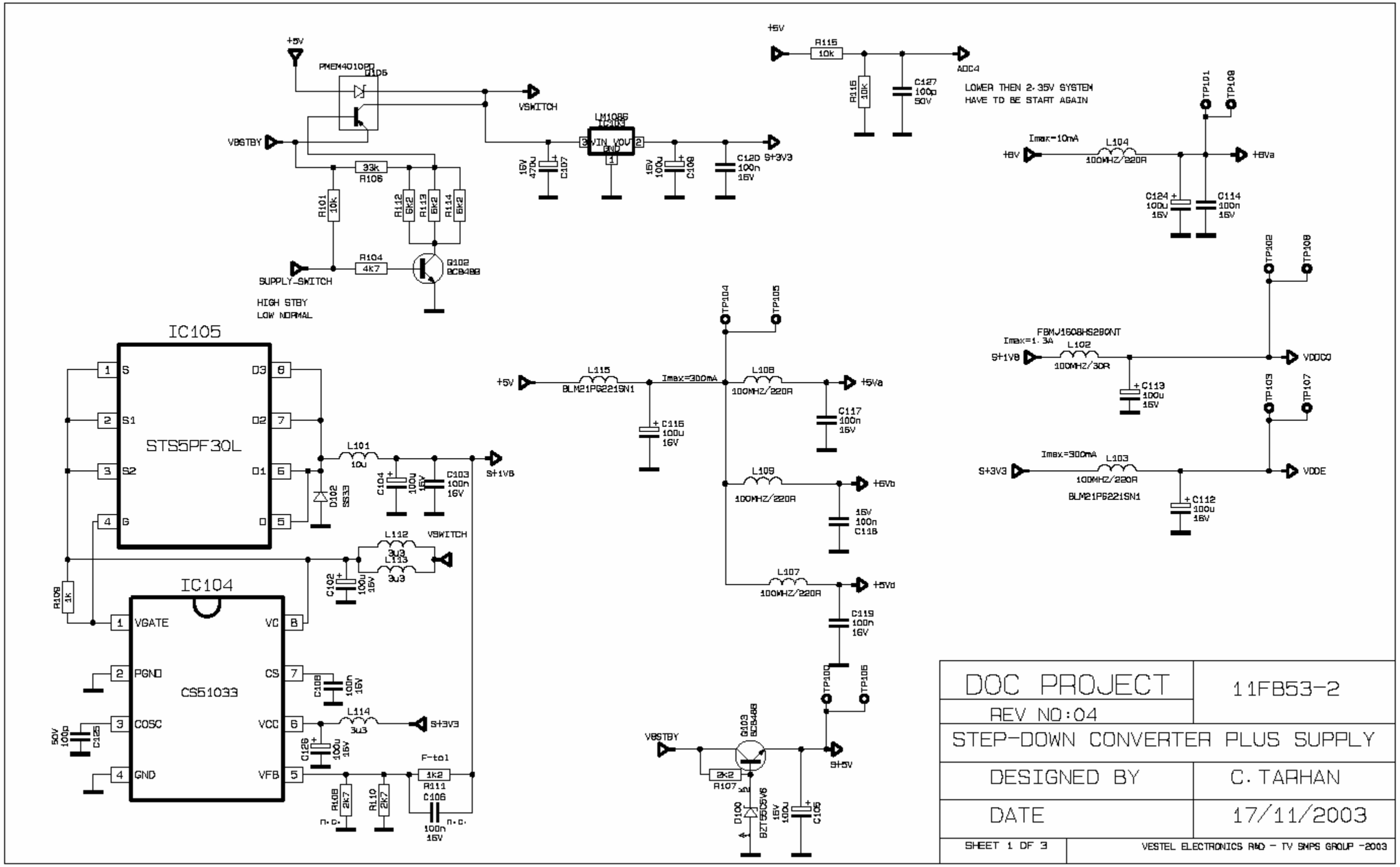

DOC PROJECT	11FB53-2
REV NO:04	
STEP-DOWN CONVERTER PLUS SUPPLY	
DESIGNED BY	C.TARHAN
DATE	17/11/2003
SHEET 1 OF 3	VESTEL ELECTRONICS R&D - TV SMPS GROUP -2003

11FB53-1 (STEP-DOWN CONVERTER PLUS SUPPLY)

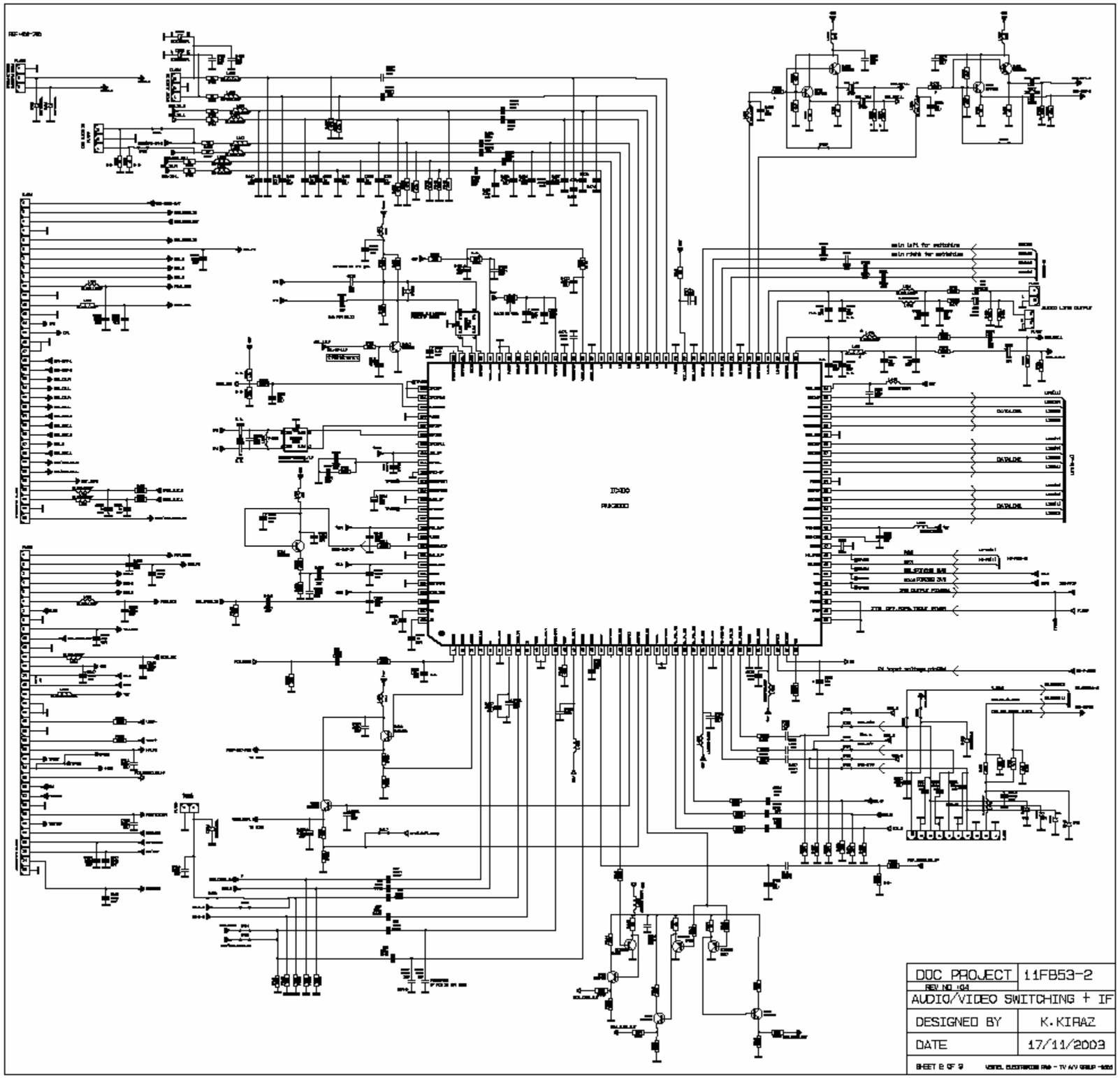

11FB53-2 (AUDIO/VIDEO SWITCHING + IF)

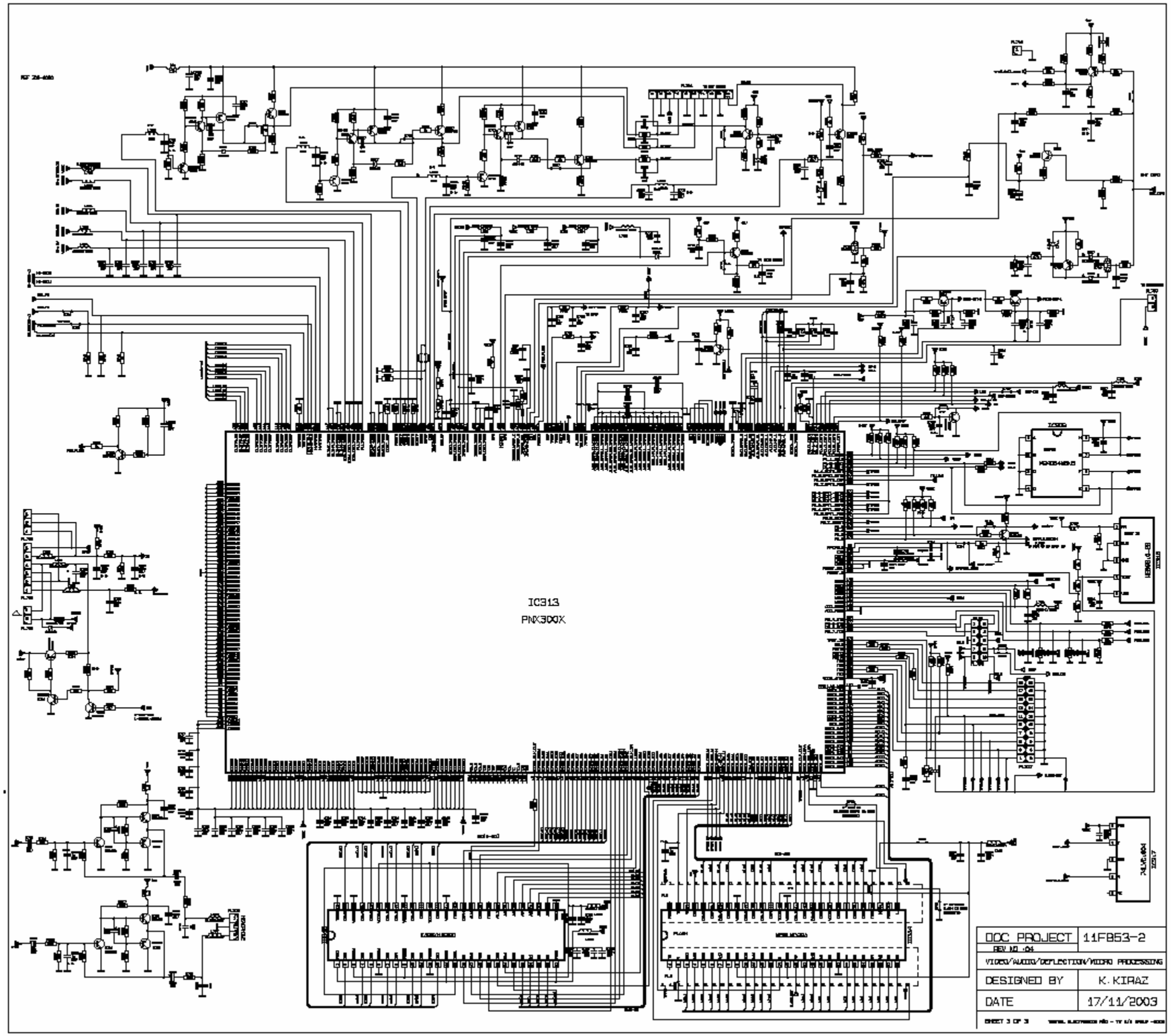

11FB53-3 (VIDEO/AUDIO/DEFLECTION/MICRO PROCESSING)

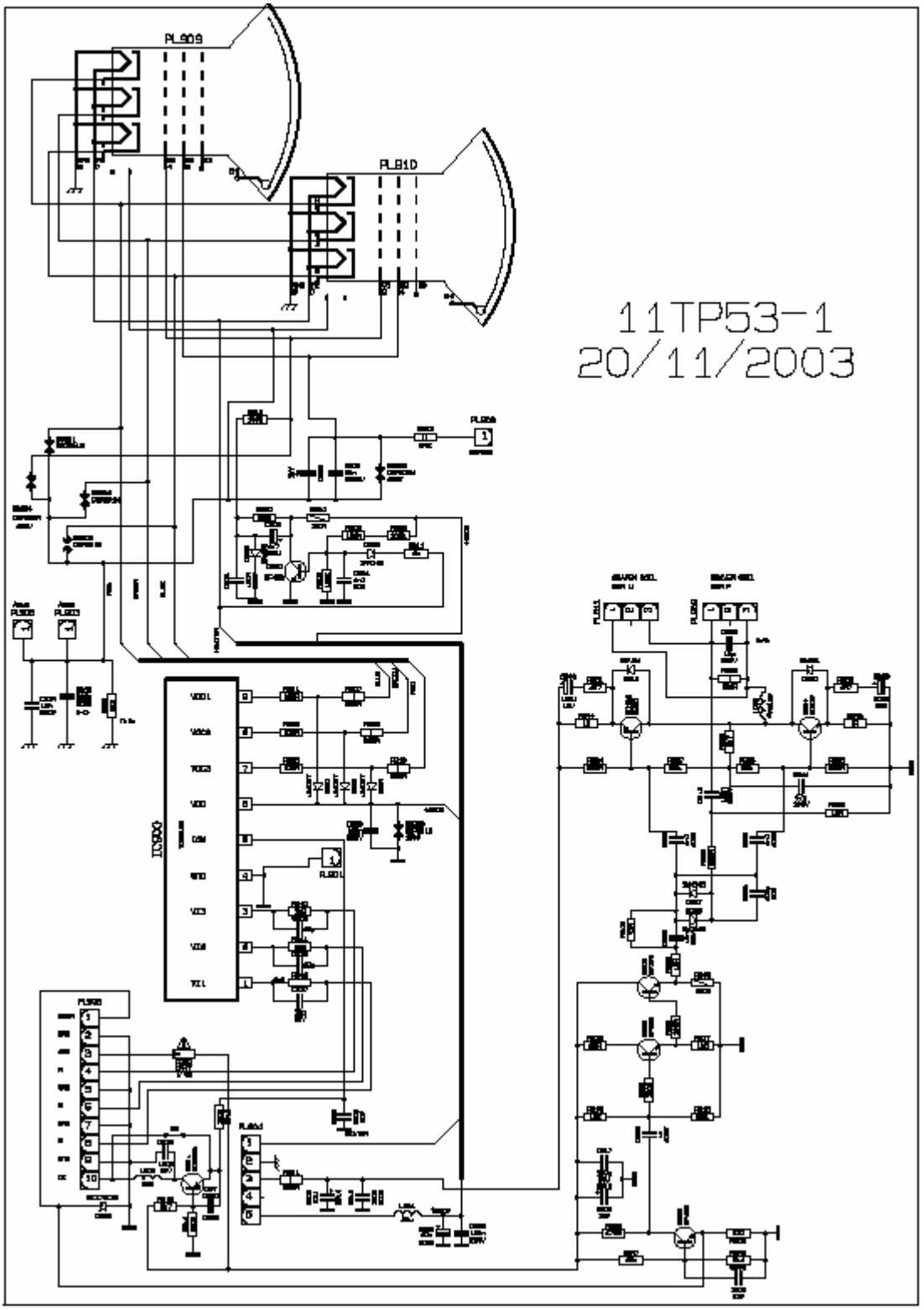

11TP53